PFAFF® Industrial

3590 -51/12070 -52/12070

INSTRUCTION MANUAL

This instruction manual applies to machines from serial number **2 791 887** and software version **0412/006** onwards.

296-12-19 189/002
Betriebsanleitung engl. 03.13

The reprinting, copying or translation of PFAFF Instruction Manuals, whether in whole or in part, is only permitted with our previous authorization and with written reference to the source.

PFAFF Industriesysteme
und Maschinen AG

Hans-Geiger-Str. 12 - IG Nord
D-67661 Kaiserslautern

Contents ..... Chapter - Page

Register 01

1 **Safety** 7
1.01 Directives 7
1.02 General notes on safety 7
1.03 Safety symbols 8
1.04 Important notes for the user 8
1.05 Notes for operating and technical staff 9
1.05.01 Operating staff 9
1.05.02 Technical staff 9
1.06 Danger warnings 10

Register 02

2 **Proper use** 11
3 **Specifications** 12
4 **Disposal of Machine** 13
5 **Transportation, packing and storage** 14
5.01 Transportation to customer's premises 14
5.02 Transportation inside the customer's premises 14
5.03 Disposal of packing materials 14
5.04 Storage 14
6 **Explanation of symbols** 15

Register 03

7 **Controls** 17
7.01 On/off switch 17
7.02 Foot switch 17
7.03 Emergency Stop/ Stop Button 18
7.04 Handwheel 18
7.05 Control panel 19

Register 04

8 **Mounting and commissioning the machine** 21
8.01 Mounting 21
8.02 Commissioning 22
8.03 Switching the machine on/off 23
8.04 Selecting the language and units 24
8.05 Checking/ Setting the carriage zero position 25
8.06 Checking/ Setting the vibrating pressur foot zero position 28

Contents ..... Chapter - Page

Register 05

9	**Preparation**	**29**
9.01	Inserting the needle	29
9.02	Winding the bobbin thread, adjusting the thread tension	30
9.03	Changing the bobbin / adjusting the bobbin thread tension	31
9.04	Threading the needle / adjusting the needle thread tension	32
9.05	Selecting the program number	33
9.06	Selecting / configuring a sequence	34
9.06.01	Selecting a sequence	34
9.06.02	Configuring a sequence	35
9.07	Selecting / combining linked programs	36
9.07.01	Selecting linked programs	36
9.07.02	Combining linked programs	37
9.08	Enter template monitoring/ template code	38
9.09	Automatic program selection	40
9.09.01	Calling up the automatic program selection function	40
9.09.02	Automatic program selection/ enter program number	41
9.10	Setting the bobbin thread stitch counter	43

Register 06

10	**Sewing**	**45**
10.01	Sewing with individual programs	45
10.02	Sewing with sequences	48
10.03	Sewing with linked programs	50
10.04	Sewing with automatic program selection	52
10.05	Program interruption	54
10.06	Error messages	55
	In the next line the cause leading to the error is displayed.	55
11	**Input**	**56**
11.01	Overview of the functions in the input mode	56
11.02	Creating / altering seam programs	58
11.02.01	Entering a comment	60
11.02.02	Block functions	61
11.02.03	Image functions	63
11.02.04	Inserting functions	65
11.02.05	Other functions	67
11.03	An example for programming a seam	69
11.04	Program management	76
11.05	Rights of access	78

Contents ..... Chapter - Page

Register 07

12	**Care and maintenance**	**81**
12.01	Maintenance intervals	81
12.02	Cleaning the machine	81
12.03	Check oil level of head assembly parts lubrication	82
12.04	Check oil level of hook lubrication	82
12.05	Lubricate head assembly and template guide	83
12.06	Exchange the sliding inlay of the template frame	84
12.07	Checking/adjusting the air pressure	85
12.08	Cleaning the air filter of the air-filter/lubricator	85
12.09	Clean fan air filter	86
13	**Adjustment**	**87**
13.01	Notes on adjustment	87
13.02	Tools, gauges and other accessories	87
13.03	Abbreviations	87
13.04	Adjusting the sewing assembly	88
13.04.01	Balance weight	88
13.04.02	Needle bar in sewing direction	89
13.04.03	Preliminary adjustment of the needle height	90
13.04.04	Needle rise, hook clearance, needle height and needle guard	91
13.04.05	Bobbin case opener	92
13.04.06	Counter presser	93
13.04.07	Bobbin thread slide	94
13.04.08	Neele turning device	95
13.04.09	Re-engaging the slip-clutch	96
13.05	Adjusting the thread trimmer	97
13.05.01	Resting position of roller lever/radial position of control cam	97
13.05.02	Position and height of the thread catcher	98
13.05.03	Knife pressure	99
13.05.04	Bobbin thread clamp spring	100
13.05.05	Manual cutting test	101
13.06	Adjusting the template drive	102
13.06.01	Y drive initiator	102
13.06.02	X drive initiator	103
13.06.03	Adjusting the belt tensions	104
13.06.04	Jig drive reference points	105
13.07	Service menu	107
13.07.01	Cold start	109

Contents ..... Chapter - Page

13.07.02 Loading / updating the operating program 110
13.08 Sewing motor adjustments 111
13.09 Parameter settings 112
13.09.01 Selecting and altering parameters. 112
13.09.02 List of parameters 113
13.09.03 Carriage start (NIS) 116
13.10 Photocell for the template cover monitoring. 117

Register 08

14 Control 119
14.01 Basic setting / Diagnosis / Pin assignment 119
14.01.01 Power unit A30 119
14.01.02 Basic control unit A20 120
14.01.03 Sewing drive A22 122
14.02 Description of the error messages 123
14.02.01 General errors 123
14.02.02 CAN-errors 126
14.02.03 Stitch generation errors 126
14.02.04 Sewing motor errors 127
14.02.05 RFID error 128
14.03 List of outputs and inputs 128
14.03.01 CAN-nodes 1 128
14.03.02 CAN-nodes 2 129
14.03.03 Special outputs 130
14.04 Boot key 131

15 Pneumatics-switch diagram 132

16 Circuit diagrams 135

1 Safety

1.01 Directives

The machine has been constructed in accordance with the requirements listed in the EC Declaration of Conformity and the Declaration of Incorporation.
In addition to this Instruction Manual, also observe all generally accepted, statutory and other regulations and legal requirements - also those of the country in which the machine will be operated - and all valid environmental protection regulations!
Applicable local regulations of the social insurance society for occupational accidents or other supervisory organizations are to be strictly adhered to!

1.02 General notes on safety

- This machine must only be operated by adequately trained operators and only after having completely read and understood the Instruction Manual!
- All Notes on Safety and Instruction Manuals of the motor manufacturer are to be read before operating the machine!
- The Danger and Safety Instructions on the machine itself are to be followed!
- This machine must only be used for the purpose for which it is intended and must not be operated without its safety devices. All applicable safety regulations must be observed.
- When leaving the machine unattended and during maintenance work, the machine must be disconnected from the power supply by operating the main switch or by removing the plug from the mains!
- Daily maintenance work must only be carried out by appropriately trained personnel!
- When carrying out servicing or repair work on pneumatic devices, the machine must be disconnected from the pneumatic supply network! The only exceptions to this are adjustment work and functional tests carried out by appropriately trained personnel!
- Repair work and special maintenance work must only be carried out by specialists or appropriately trained personnel!
- Work on electrical equipment must only be carried out by appropriately trained specialist personnel!
- Work is not permitted on parts and equipment which are connected to the power supply! Exceptions to this are contained in the regulations EN 50110.
- Modifications and alterations to the machine must only be carried out pursuant to all relevant safety regulations!
- Only spare parts which have been approved by us are to be used for repairs! We expressly point out that any replacement parts or accessories not supplied by us have not been tested and approved by us. The installation and/or use of any such products may result in negative changes to the constructional characteristics of the machine. We are not liable for any damage which may be caused by non-original parts.

1.03 Safety symbols

Danger!
Special points to observe.

Danger of injury to operating or technical staff!

Danger of hands being crushed!

Caution

Do not operate without finger guard and safety devices.

Before threading, changing bobbin and needle, cleaning etc. **switch off main switch**.

1.04 Important notes for the user

- This instruction manual belongs to the equipment of the machine and must be available to the operating staff at all times.
- This instruction manual must be read before the machine is operated for the first time.
- Both operating and technical staff must be instructed on the safety devices of the machine and on safe working methods.
- It is the duty of the user to operate the machine in perfect running order only.
- The user must ensure that none of the safety devices are removed nor put out of working order.
- The user must ensure that only authorized persons operate and work on the machine.

For further information please refer to your PFAFF agency.

1.05 Notes for operating and technical staff

1.05.01 Operating staff

Operating staff are the persons responsible for setting up, operating and cleaning the machine and for eliminating any malfunctioning in the sewing area.

The operating staff is obliged to observe the following points:

- The notes on safety in this instruction manual must always be observed!
- Any working methods, which adversely affect the safety of the machine, must be avoided.!
- Loose-fitting clothing should be avoided. No jewellery, such as chains and rings, should be worn!
- Ensure that only authorised persons enter the danger area of the machine!
- Any changes occurring on the machine, which may affect its safety, must be reported to the user immediately.

1.05.02 Technical staff

Technical staff are persons who have been trained in electrical engineering/electronics and mechanical engineering. They are responsible for lubricating, servicing, repairing and adjusting the machine.

The technical staff is obliged to observe the following points:

- The notes on safety in this instruction manual must always be observed!
- Before carrying out any adjustment or repair work the main switch must be switched off and measures taken to prevent it from being switched on again!
- Never work on parts or equipment still connected to the power supply! Exceptions are only permissible in accordance with the regulations EN 50110.
- All safety covers must be replaced after the completion of maintenance or repair work!

1.06 Danger warnings

A working area of **1 m** must be kept free both in front of and behind the machine, so that easy access is possible at all times.

Never put your hands in the sewing area during sewing!
Danger of injury by the needle!

Never leave objects on the table while adjusting the machine settings! Objects can become trapped or be slung away! Danger of injury by hurled objects!

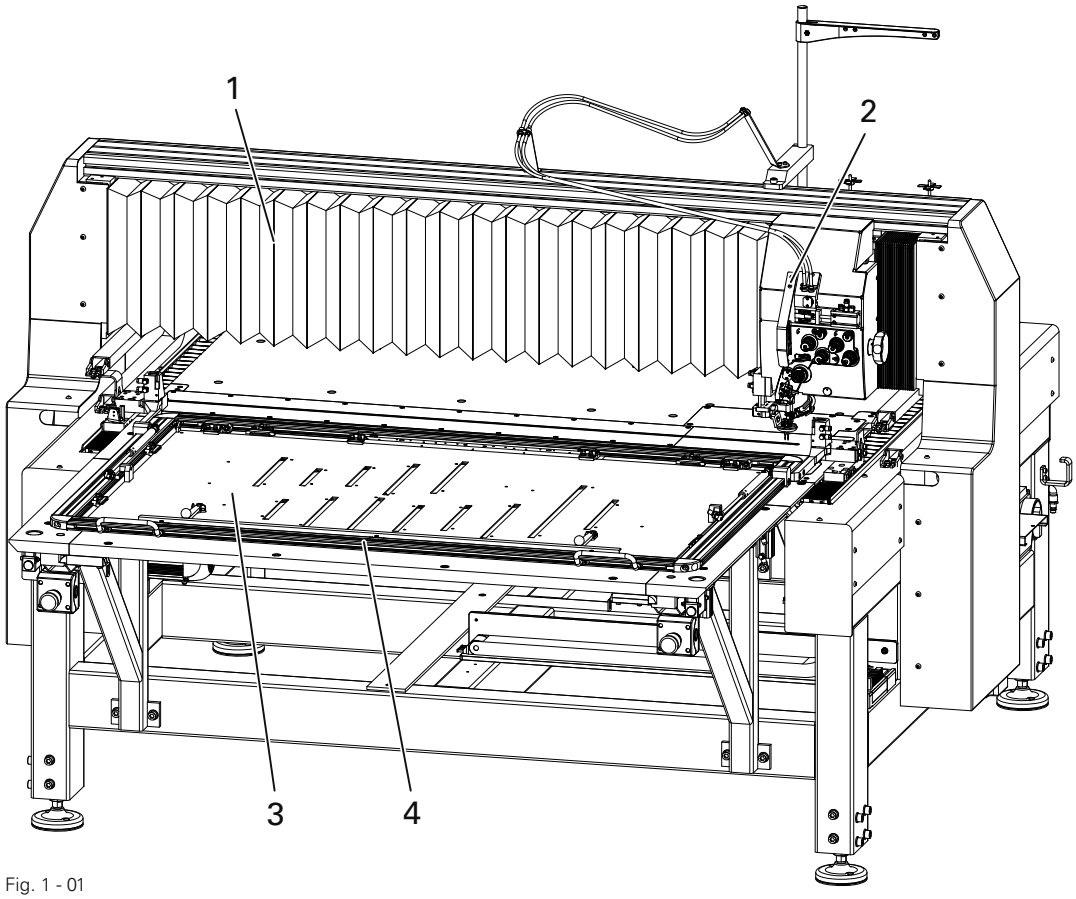

Fig. 1 - 01

Do not operate the machine without the protective covers **1** and **2**!
Danger of crushing between moving parts of the pneumatic and/or transport devices.

Do not operate the machine without take-up lever guard **3**!
Danger of injury by the movement of the take-up lever!

Lift and close the template/ template cover **3** with both hands.
Warning: Hazard of pinching between the template/template cover and the frame **4**!

Register 02

2 Proper use

PFAFF **3590-51/12070** is a single-needle large area automatic backtacker.
PFAFF **3590-52/12070** is a two-needle large area automatic backtacker.

These machines are designed for use in the production of backtack and mounting seams in the plastic and automotive supply industry.

Any and all uses of this machine which have not been approved of by the manufacturer are considered to be inappropriate! The manufacturer cannot be held liable for any damage caused by the inappropriate use of the machine! The appropriate use of the machine means that all operational, adjustment, maintenance and repair measures required by the manufacturer are to be observed!

3 Specifications▲

Max. sewing speed:.....2000 s.p.m.
Max. stitch length: .....0,1 - 12 mm
Stitch type:.....301 (lockstitch)

Needle system:.....134-35 KK
Needle size ..... 80 – 160

Operating voltage: .....230 V ± 10%, 50/60 Hz, A/C
Power requirement: .....2.2 kW
Leakage current ..... ≤ 5 mA◆

Control range:
3590-51/12070, 3590-52/12070 .....1200 x 700 mm
Storage capacity: ..... 5.000.000 stitches
Min. working pressure:..... 6 bar (= 0,6 MPa, = 87 psi)
Air consumption:.....approx. 15l/cycle

Machine dimensions:
Length:.....approx. 2400 mm
Width: .....approx. 2050 mm
Height: .....approx. 1800 mm

Net weight: ..... 1000 kg

Ambient temperature
85% rel. humidity (condensation not permitted): ..... 5 – 40° C

Noise data
Emission sound pressure level at the workplace
at a sewing speed of 1000 spm..... L_{pA} < 78 dB(A)■
(Noise measurement in acc. with DIN 45 635-48-A-1, ISO 11204, ISO 3744, ISO 4871)

▲ Subject to alteration

◆ Due to the use of network filters there is a nominal leakage current of ≤ 5 mA.

■ K_{pA} = 2,5 dB

4 Disposal of Machine

- Proper disposal of the machine is the responsibility of the customer.
- The materials used for the machine are steel, aluminium, brass and various plastic materials. The electrical equipment comprises plastic materials and copper.
- The machine is to be disposed of according to the locally valid pollution control regula-tions; if necessary, a specialist ist to be commissioned.

Care must be taken that parts soiled with lubricants are disposed of separately according to the locally valid pollution control regulations!

5 Transportation, packing and storage

5.01 Transportation to customer's premises

The machines are delivered completely packed.

5.02 Transportation inside the customer's premises

The manufacturer cannot be made liable for transportation inside the customer's premises nor to other operating locations. It must be ensured that the machines are only transported in an upright position.

5.03 Disposal of packing materials

The packing materials of this machine comprise paper, cardboard and VCE fibre. Proper disposal of the packing material is the responsibility of the customer.

5.04 Storage

If the machine is not in use, it can be stored as it is for a period of up to six months, but It should be protected against dust and moisture.
If the machine is stored for longer periods, the individual parts, especially the surfaces of moving parts, must be protected against corrosion, e.g. by a film of oil.

6 Explanation of symbols

In this instruction manual, work to be carried out or important information is accentuated by symbols. These symbols have the following meanings:

Note, information

Cleaning, care

Lubrication

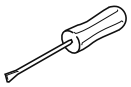

Maintenance, repairs, adjustment, service work
(only to be carried out by technical staff)

Register 03

7 Controls

7.01 On/off switch

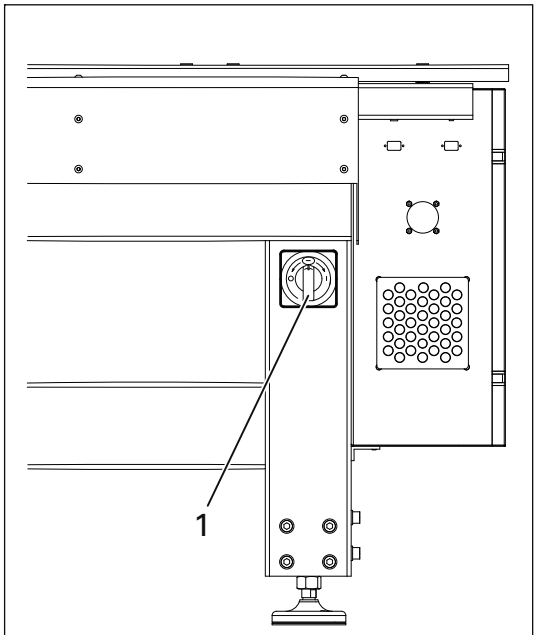

Fig. 7 - 01

- By turning on/off switch **1**, the power supply to the machine is switched on or off.

7.02 Foot switch

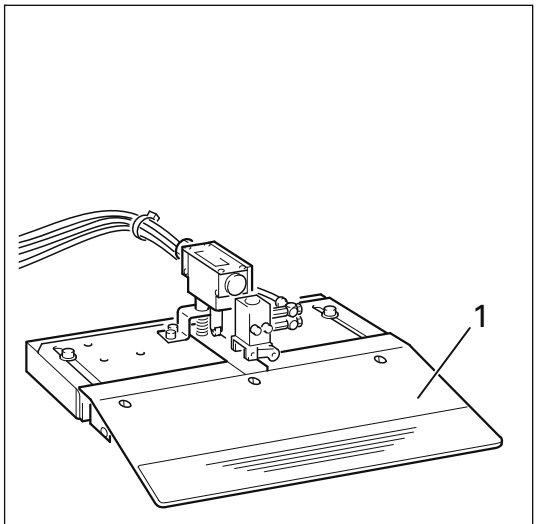

Fig. 7 - 02

- The foot switch can be operated in **2** positions and has the following functions, depending on how it is set.

FLIP-FLOP-mode on

Pos. **1**: Jig is locked in jig drive.
When action is repeated, lock is released.

Pos. **2**: Work sequence is started.

FLIP-FLOP-mode off

Pos. **1**: Jig is locked in jig drive.
Lock is released immediately after the foot switch is released.

Pos. **2**: Work sequence is started.

7.03 Emergency Stop/ Stop Button

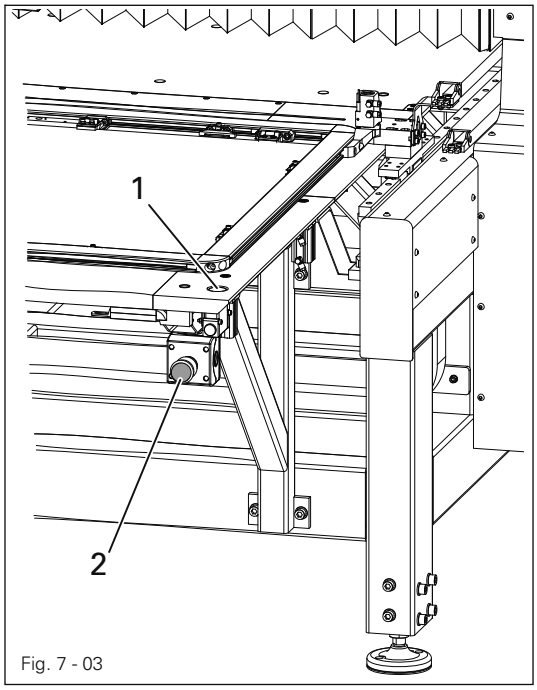

Fig. 7 - 03

- The entire work process will be stopped when the Stop button **1** on the left or right is pressed. See also **Section 10.05 'Programme interruption'.**
- The machine is switched off when the Emergency Stop button **2** on the left or right is pressed.

7.04 Handwheel

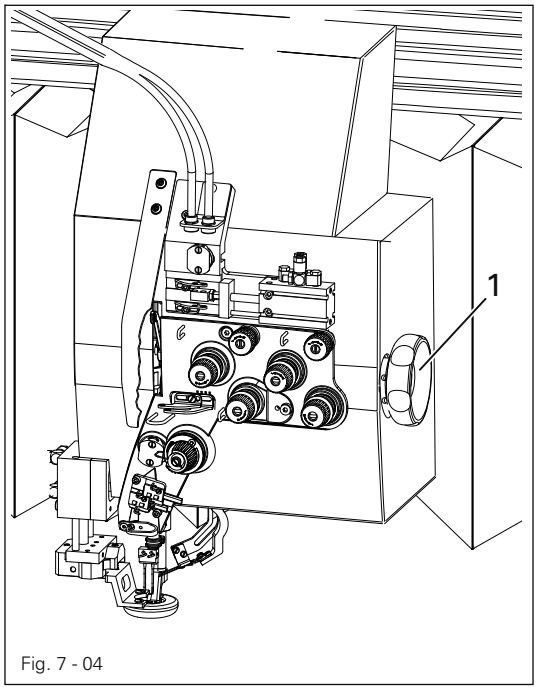

Fig. 7 - 04

- By turning the handwheel **1** in, the needle bar can be positioned manually as required.

7.05 Control panel

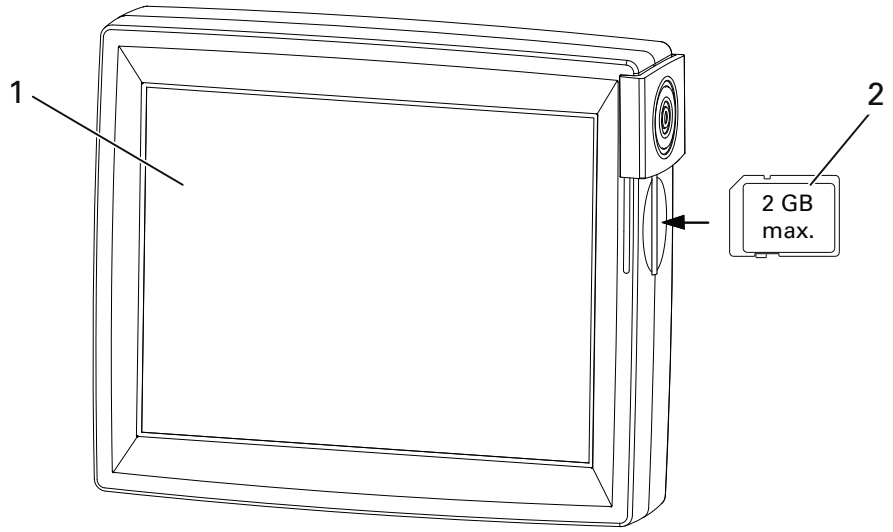

Fig. 7 - 05

The current operating conditions are displayed on control panel **1**. Operation takes place in a constant dialogue between the control unit and the operator. For this purpose, depending on the operating condition of the machine, different symbols and/or texts are displayed. If the symbols or texts are framed, these show functions which can be selected by pressing the appropriate position on the monitor. By pressing the corresponding function this is carried out or switched on or off immediately, or a further menu appears, e.g. for entering a value. Activated functions are shown with inverted symbols. Unframed symbols or texts are only used for display purposes and cannot be selected by pressing.
To read sewing programs or install machine software, use the sd-card **2** in the control panel.

Description of the functions

22	Normal symbol = function switched off (inactive)
22	Inverted symbol = function switched on (active)

8 Mounting and commissioning the machine

After unpacking the machine, check it for any transport damage. In case of damage, inform the shipping company and the responsible PFAFF dealer.

The machine must only be mounted and commissioned by qualified personnel! All relevant safety regulations are to be observed!

8.01 Mounting

At the machine's location, there must be a stable and horizontal surface as well as suitable electricity and compressed air supplies (see chapter **3** Specifications).

The frontal carrier and the table top are dismantled for reasons of packaging. Their mounting is described below.

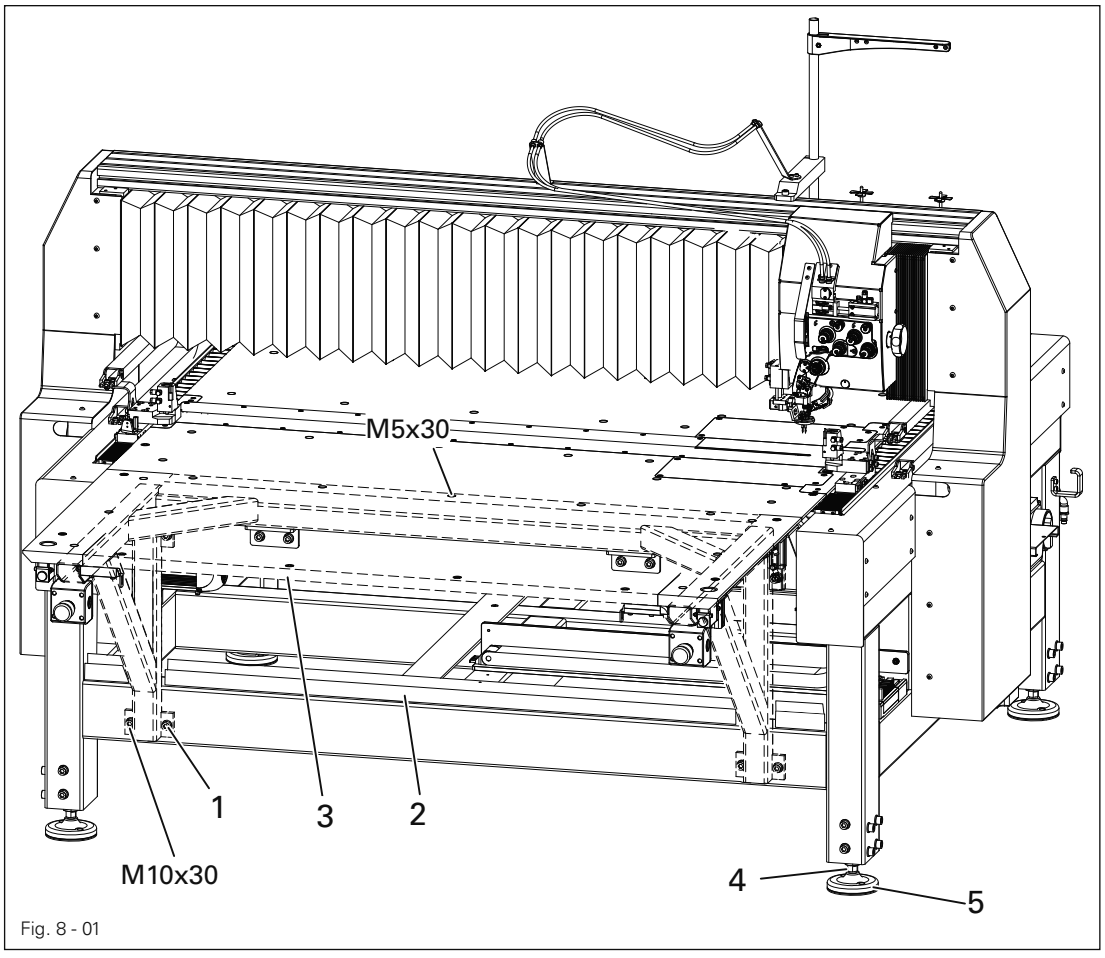

Fig. 8 - 01

- Use a forklift to lift the machine off the transport pallet.
- Mount the pre-assembled carrier **1** with eight screws **M10x30** on the stand.
- Connect the pneumatic and electric plug connectors located in the cable duct **2**.
- Screw on the table top **3** with five screws **M5x30** and cover with the plastic caps.

The machine must be horizontally aligned in all directions with a spirit level at its installation location!

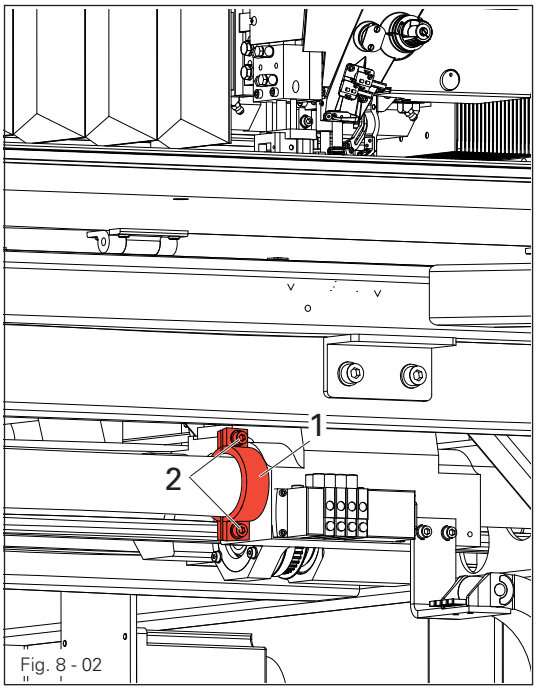

Fig. 8 - 02

- Height adjustment is facilitated by loosening the lock nut **4** and twisting the support legs **5**. (see **Fig. 8 - 01**)!
- Remove transit support **1** (screws **2**).

Remove the transit support **1** (screws **2**) before initial commissioning.

8.02 Commissioning

- Before commissioning the machine, clean it thoroughly and lubricate it, or pour in oil, see Chapter **12 Care and Maintenance**!
- The machine, in particular the electric wires and pneumatic connection tubes, must be examined for any damage.
- **Check** the **hook-to-needle distance** as described in Section **13.05.0**4.
- Have skilled personnel check if the machine can be operated with the available mains voltage.

Do not operate the machine if there is any discrepancy.

The machine may only be connected to an earthed socket!

- Connect machine to the compressed air system.
  The manometer on the air filter/lubricator unit must display a pressure of **6** bar.
  If necessary, set to the correct value (see chapter **12.07 Checking / regulating air compression**).

8.03 Switching the machine on/off

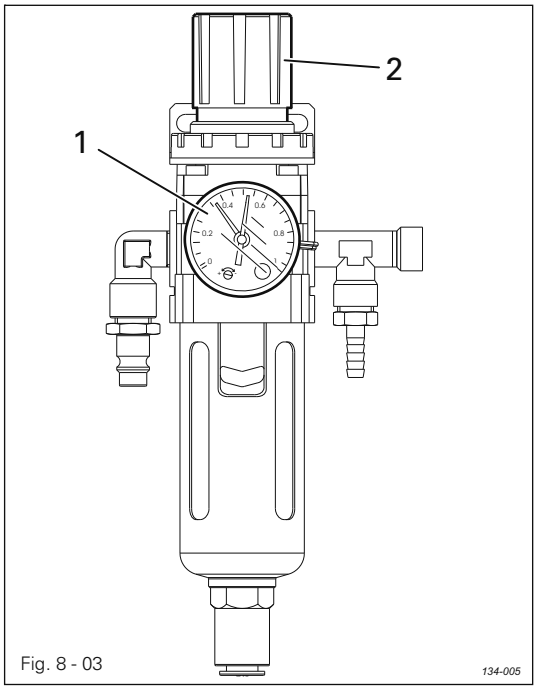

Fig. 8 - 03

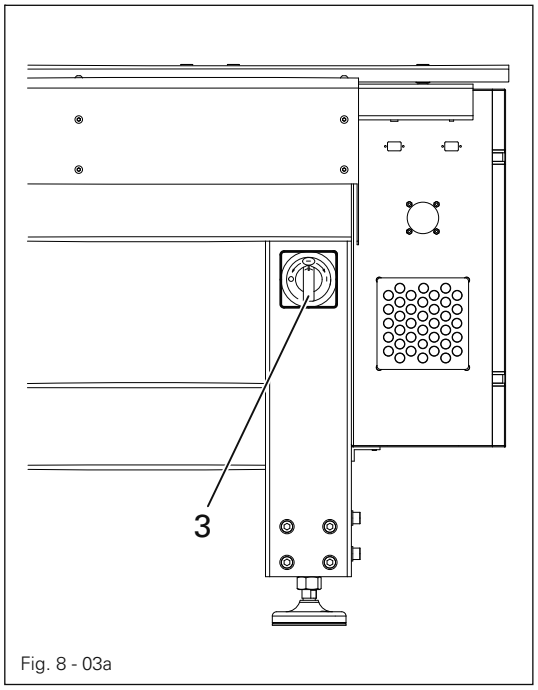

Fig. 8 - 03a

- Check air pressure on pressure gauge **1** and, if necessary, adjust air pressure with adjusting knob **2**.
- Turn main switch **3** to position "I"

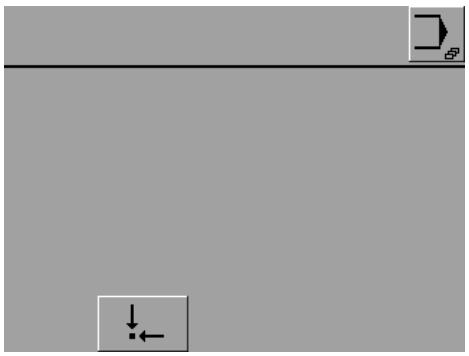

- After booting the machine control unit, to start the machine, move it back to its basic position.
- Carry out a test run, see Chapter **10 Sewing.**

When commissioning the machine, the zero points must be checked or adjusted (see Chapter **8.05** and **8.06 Checking / adjusting the zero points**).

- To switch off the machine, turn main switch **3** to position "**0**".

Description of other functions on the display

Input menu
This function is used to call up the input mode, see Chapter **11 Input**.

8.04 Selecting the language and units

- Switch on the machine.

- Call up the input menu.

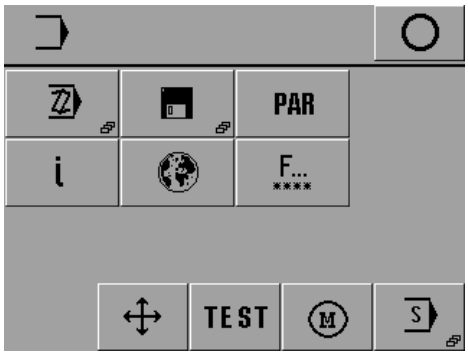

- Call up the settings menu.

- Select the appropriate language.

8.05 Checking/ Setting the carriage zero position

The zero position values must be set at initial commissioning or after replacing the control unit or one of the initiators of the template drive!

- Call up the input menu.

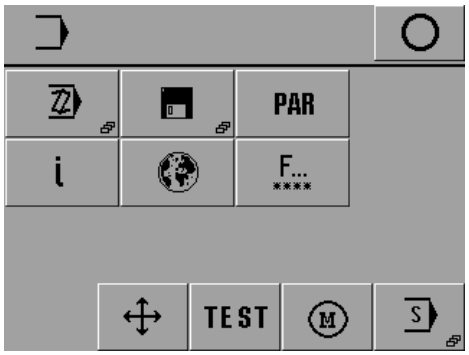

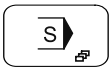

- Select the service menu.

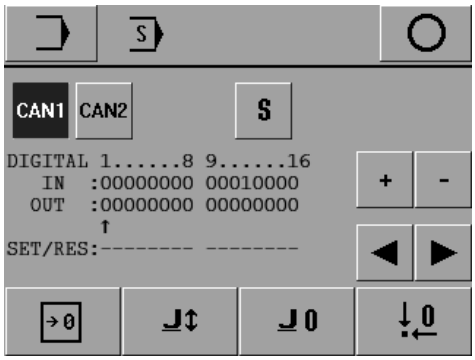

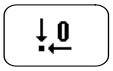

- Call the function "Set zero position".

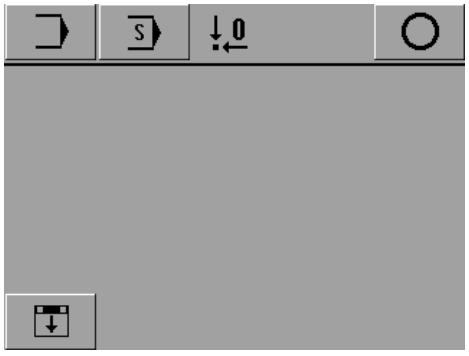

- Insert the jig

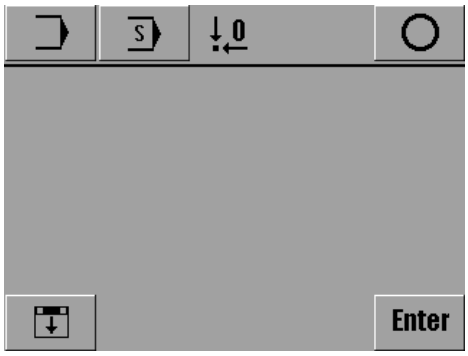

Enter ● Confirm the operation and continue the cycle.

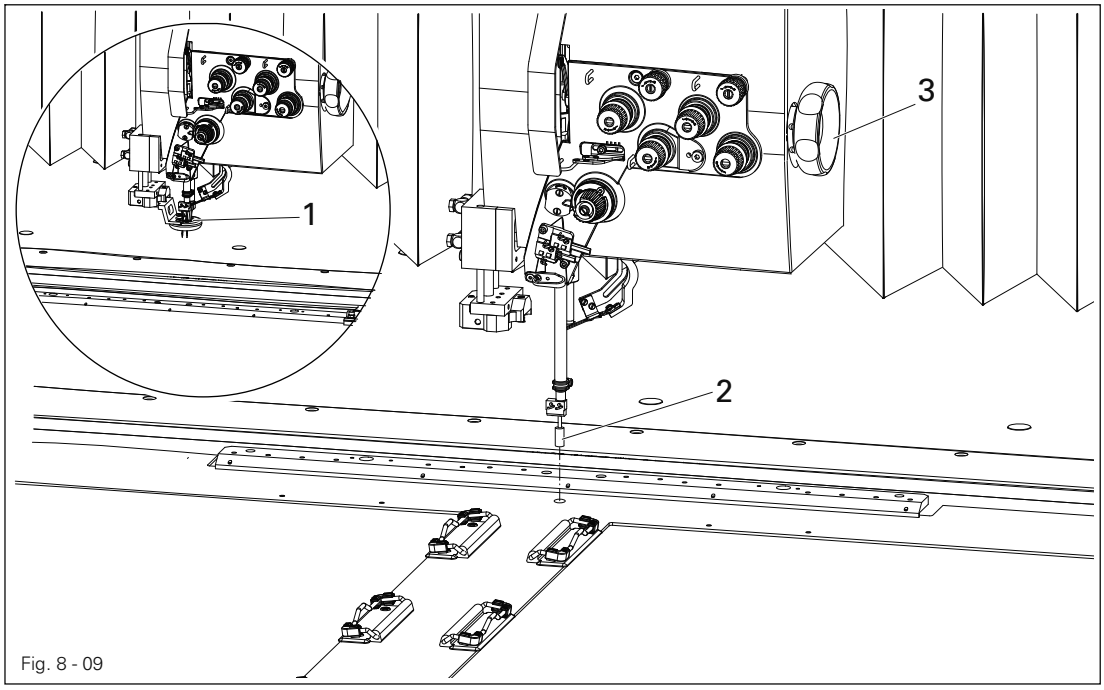

Fig. 8 - 09

- Unscrew retainer 1.
- Insert adjustment pin 2 into the needle bar, and tighten (use the needle support on the right in two-needle machines).
- By turning balance wheel 3 check whether the adjustment pin 1 can be guided into the jig adjustment hole.

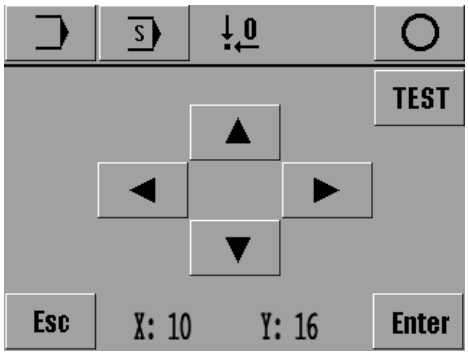

- If necessary, correct the jig position accordingly with the direction symbols.

Enter ● Save settings, remove cover pin 2 and replace retainer 1.

- Conclude the zero points input..

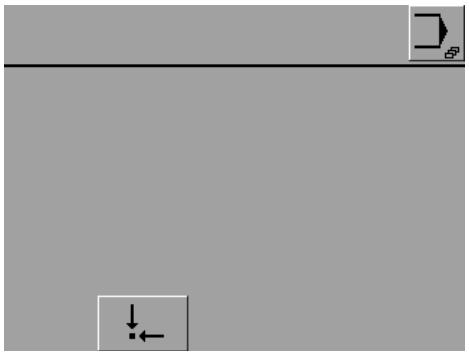

- Move the machine to the basic position. The machine is ready for operation.

8.06 Checking/ Setting the vibrating pressur foot zero position

The zero position values must be set at initial commissioning or after replacing the control unit or the initiator of the vibrating pressur foot drive!

- Call up the input menu.

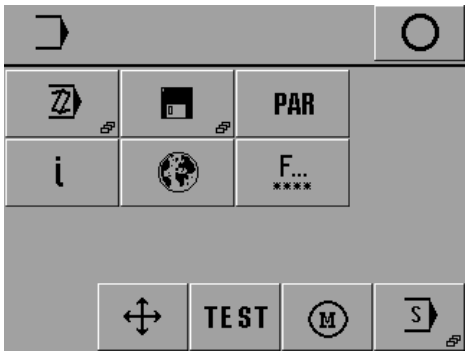

- Select the service menu.

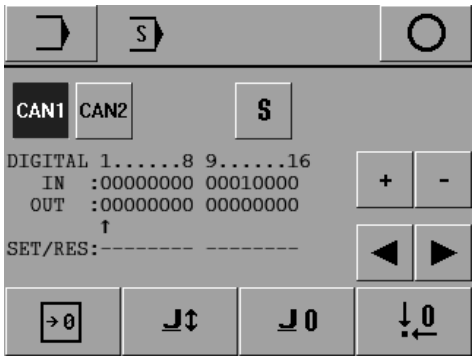

- Call the function 'Set vibrating pressur foot zero positions'.

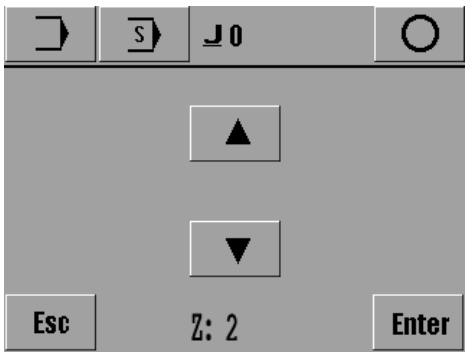

- A gap of 5 mm between the counter pressur and the vibrating pressur foot.
- Correct setting as needed via the arrow buttons.
- Confirm Imput.

9 Preparation

All regulations and instructions in this Instruction Manual are to be observed!
Special attention is to be paid to the safety regulations!

All preparation work is only to be carried out by appropriately trained personnel!

9.01 Inserting the needle

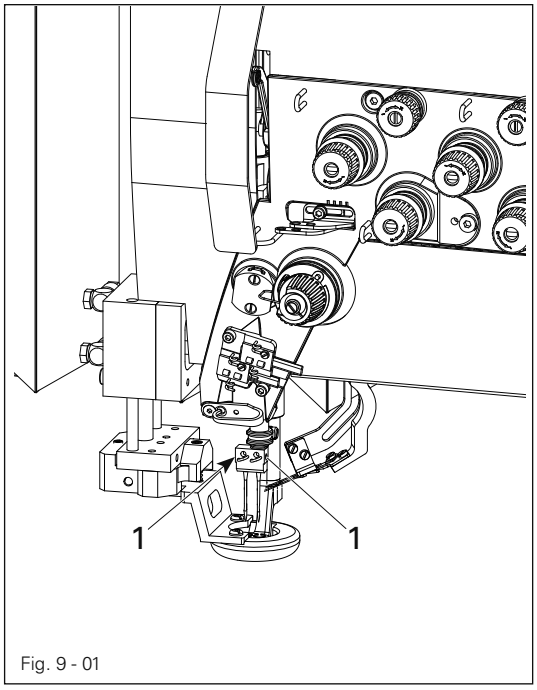

Fig. 9 - 01

Only use needles from the system intended for the machine, see Chapter **3 Specifications.**

- Switch on the machine.
- Call up the threading aid function.
  The jig moves to its service position, the sewing start function is blocked.
- Release the screws **1** and insert the needles in such a way that the long needle groove of the needle on the left faces right, and that of the right needle faces left (proceed as for the right needle for single-needle machines).
- Tighten screw **1**.
- Start the sewing cycle

or

- Move the machine to its basic position.

9.02 Winding the bobbin thread, adjusting the thread tension

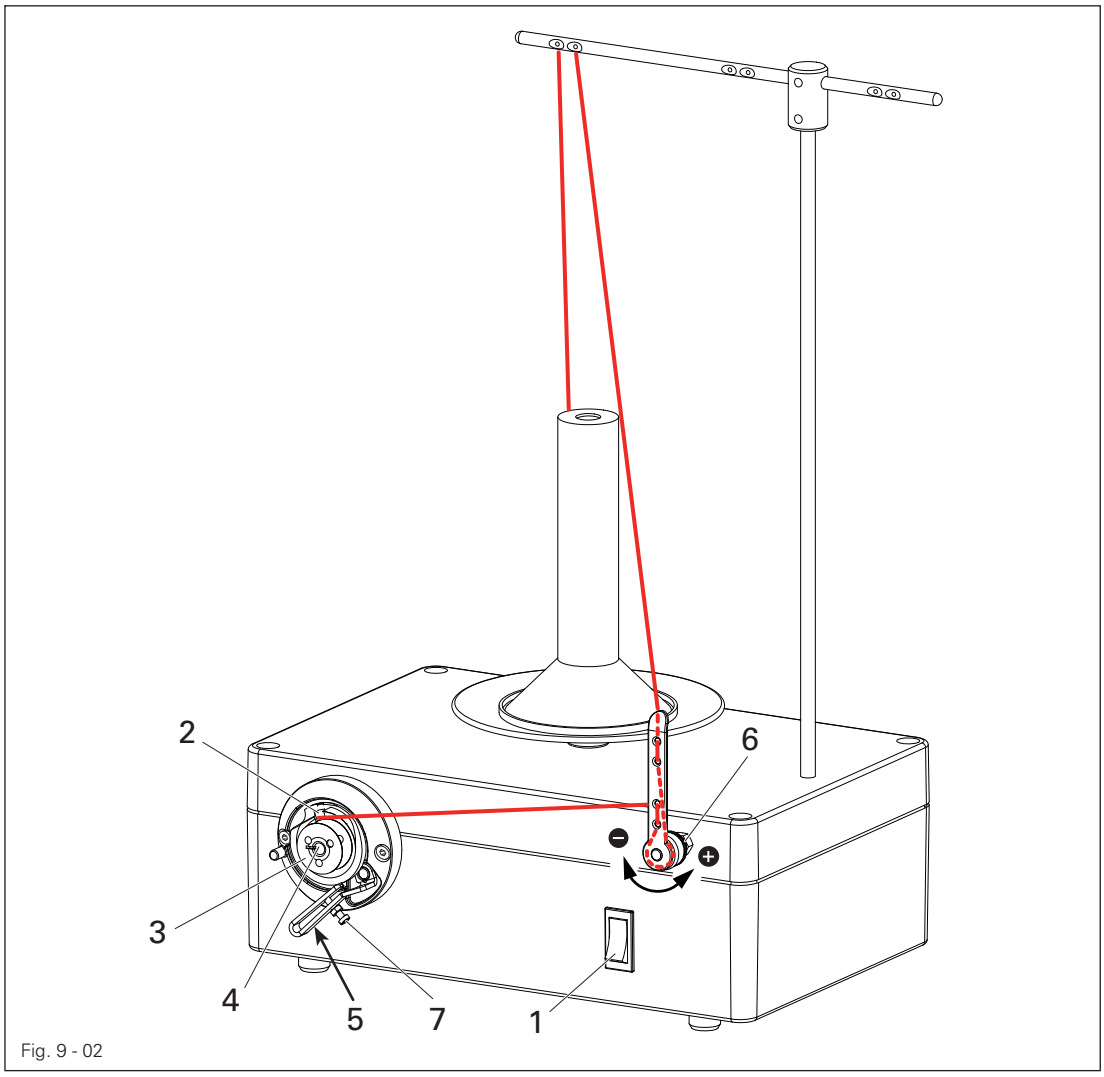

Fig. 9 - 02

- Switch mains switch **1** on.
- Thread in the thread according to Fig. **9-02** and pull behind thread trapper **2**.
- Tear off thread in thread trapper **2**. The thread is now fixed in position.
- Attach the empty bobbin **3** on bobbin winder spindle **4**.
- Press lever **5** upwards to activate the winder.
- The winder will stop automatically when the bobbin **3** is sufficiently full.
- Remove the filled bobbin **3** and tear off the thread at the thread trapper **2**.
- Thread tension on the bobbin **3** can be set via the pre-tensioner **6**.
- The fill amount of the bobbin **3** can be adjusted on the setting screw **7**.

9.03 Changing the bobbin / adjusting the bobbin thread tension

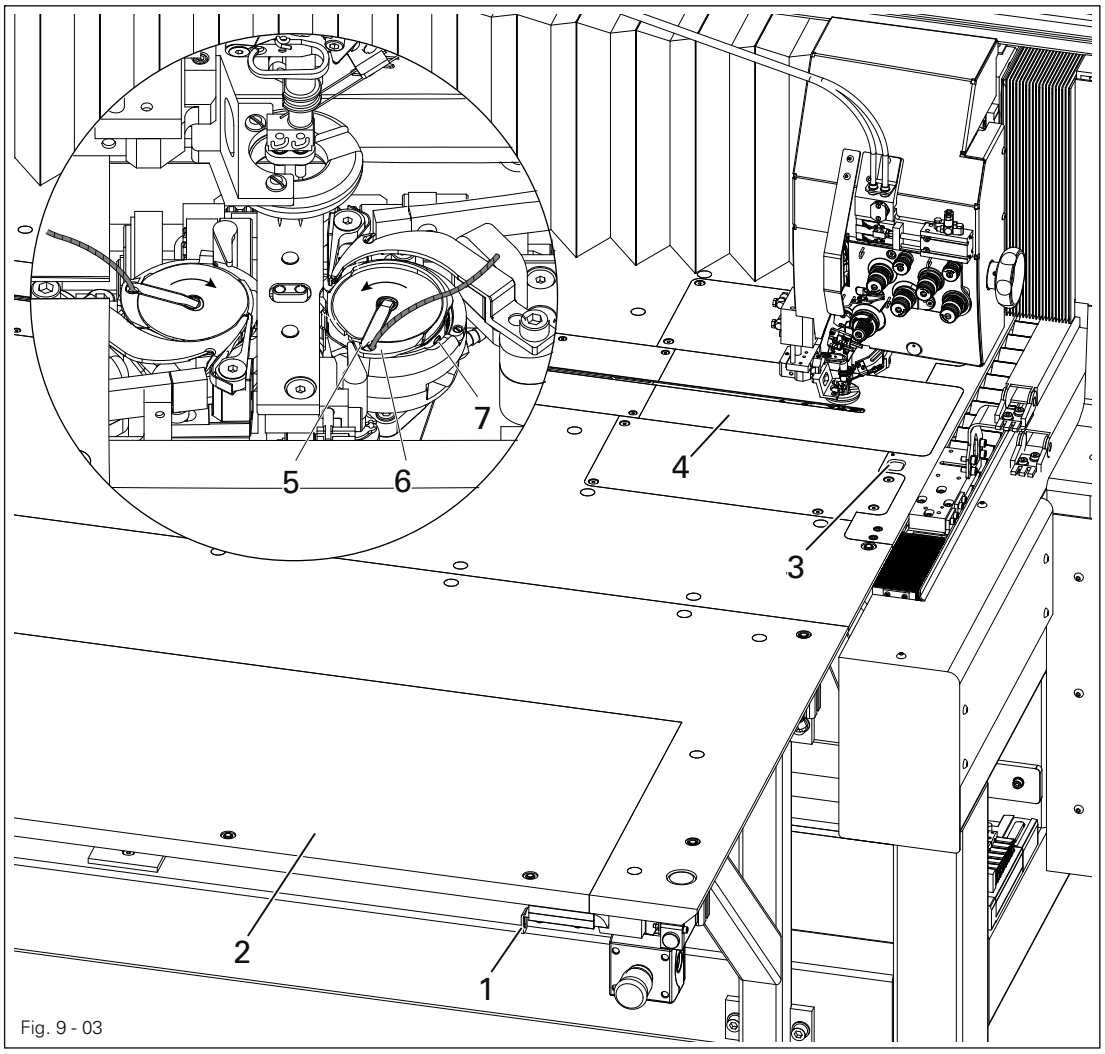

Fig. 9 - 03

- Once the number of stitches entered via the function 'Bobbin thread stitch counter' (see **Section 9.10**) have been completed or the bobbin thread sensor is triggered, the machine will automatically travel to its 'Service' position.
- Open the latches **1** on the left and right, and swivel the table top part **2** at the front downward.
- Open the hook assembly cover **4** by pressing the button **3**.
- Raise latch **5** and remove empty bobbin.
- Insert full bobbin into the hook so that it turns in the direction of the arrow when the thread is pulled out.
- Close latch **5**.
- First feed the thread through the groove and then around the horn of the bobbin base **6** and into the recess of latch **5**.
- Adjust the bobbin thread tension by turning screw **7**.

- Start the sewing cycle

or

- Move the machine to its basic position.

9.04 Threading the needle / adjusting the needle thread tension

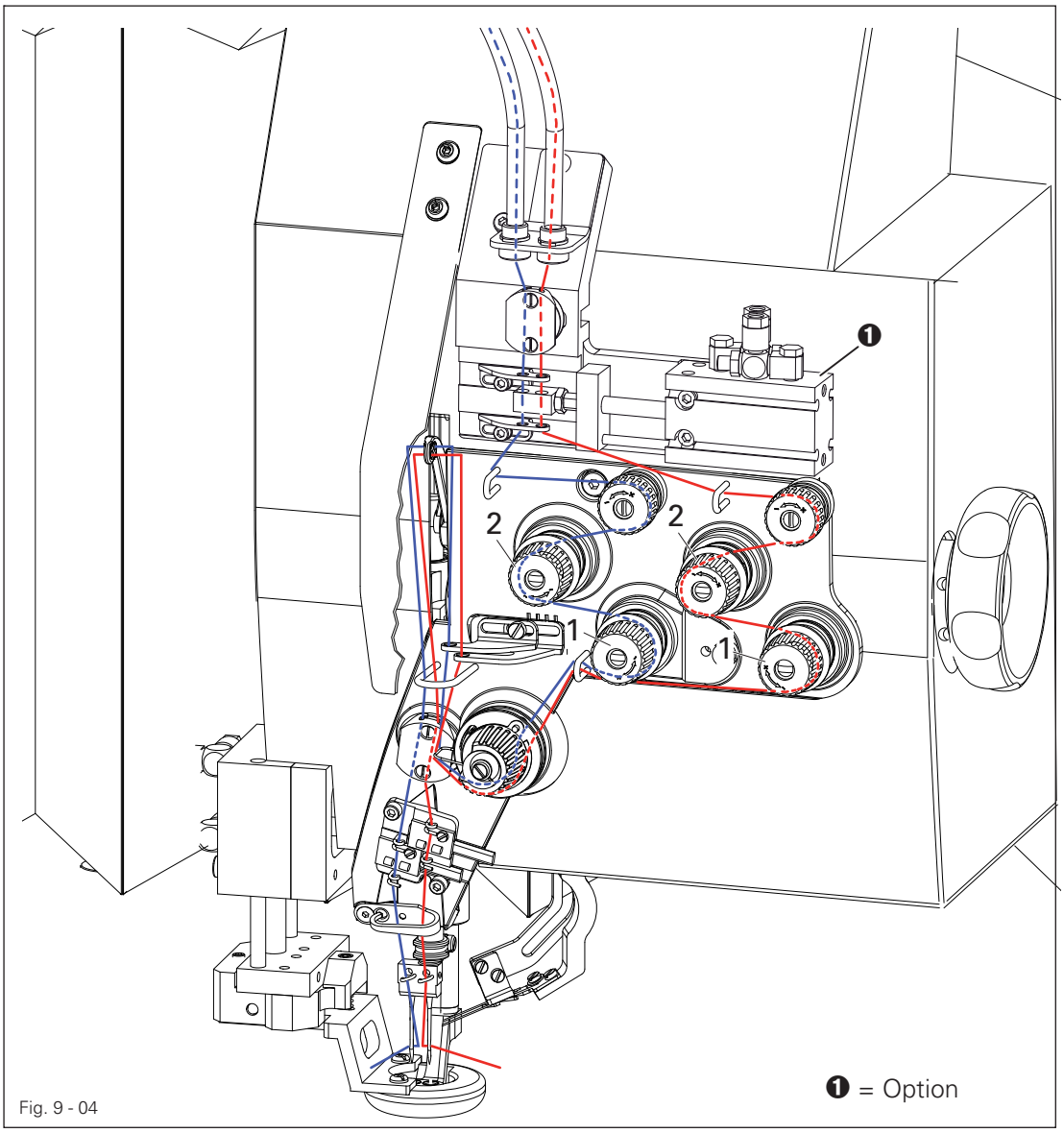

Fig. 9 - 04

- Switch on the machine.
- Call up the threading aid function.
  The template travels in service position, the vibrating pressur foot is lowered, the sewing start button is deactivated.
- Thread needle thread as illustrated above.
  (proceed as with the right needle in single-needle machines).
- Adjust needle thread tension by turning knurled screws **1** and **2**.

- Start the sewing cycle

or

- Move the machine to its basic position.

9.05 Selecting the program number

- Switch on the machine.

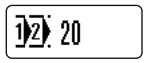

- Call up the program number input menu.

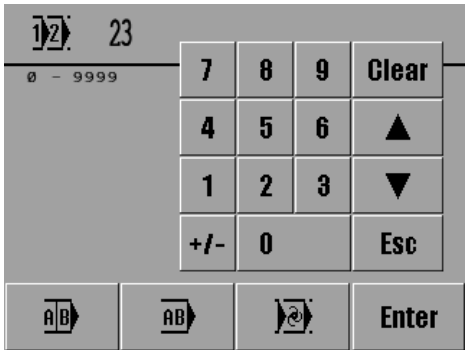

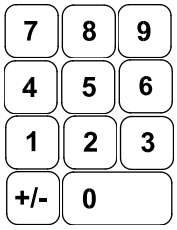

- Select the desired program number (0 – 9999) using the number block.

- Confirm the selection and quit the selection menu.

Description of the other functions

Clear
This function sets the value at "0".

Arrow keys
These functions increase or reduce the value.

Esc
This function stops the input without taking over the value entered.

Sequence selection
This function opens the menu for selecting or configuring the sequence, see Chapter 9.06 Selecting / configuring the sequence.

Linked programs
This function opens the menu for selecting or combining linked programs, see Chapter 9.07 Selecting / combining linked programs.

Automatic program selection
When this function is active, the corresponding seam program is identified and selected automatically with the clamp code, see Chapter 9.09 Automatic Program Selection.

9.06 Selecting / configuring a sequence

9.06.01 Selecting a sequence

Instead of selecting a program number, it is also possible to select a corresponding sequence, providing that individual seam programs have been allocated to a sequence, see Chapter 9.06.02 Configuring a sequence

- Switch on the machine.

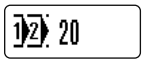

- Call up the menu for entering the program number.

- Call up the menu for entering the sequence.

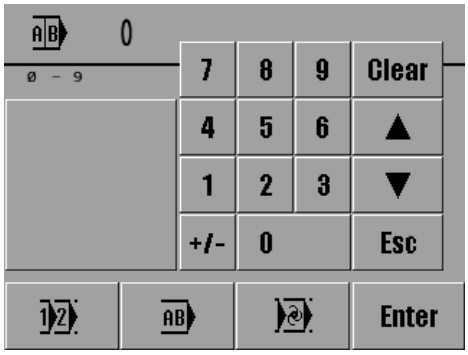

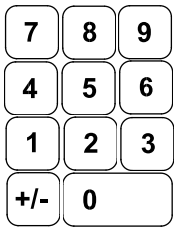

- Select the desired sequence number (0 – 9) using the number block.

- Confirm the selection and quit the selection menu.

Description of the other functions

Clear
This function sets the value at "0".

Arrow keys
These functions increase or reduce the value.

Esc
This function stops the input without taking over the value entered.

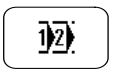

Program selection
This function opens the menu for selecting a program, see Chapter 9.05 Selecting a program number.

Linked programs
This function opens the menu for selecting or combining linked programs, see Chapter 9.07 Selecting / combining linked programs.

Automatic program selection
When this function is active, the corresponding seam program is identified and selected automatically with the clamp code, see Chapter 9.09 Automatic Program Selection.

9.06.02 Configuring a sequence

Up to 8 seam programs can be allocated to a sequence. During sewing the seam programs of a selected sequence appear as a function on the display and can be selected directly.

- Call up the menu for entering the sequence and select the desired sequence number without leaving the selection menu, see 9.06.01 Selecting a sequence.

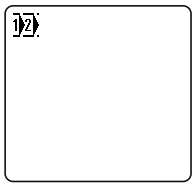

- Call up the sequence programming function.

- Configure the sequence from existing seam programs by entering the program numbers on the number block.

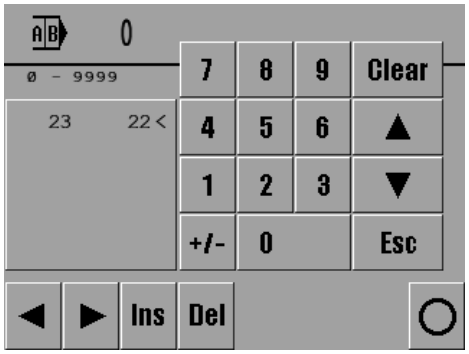

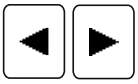

- The cursor in the window shows, which seam program has been taken out of the group, or at which position a new seam program has been inserted. The cursor is moved with the arrow keys.

- If applicable, insert (INS) the seam program at the current cursor position, or delete (DEL) the marked seam program from the sequence.

- Conclude the sequence programming function.

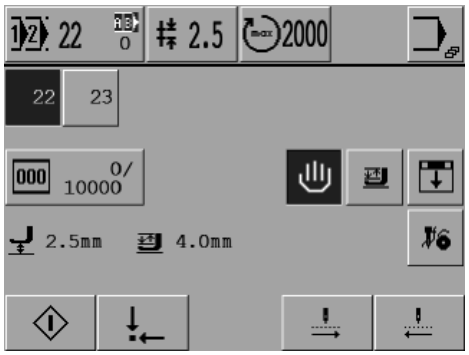

To enable, for example, quicker access to up to 8 different seam programs, the function for automatic switching to the next seam program of a sequence function can be switched off with parameter "114", see Chapter 13.09.02 List of parameters.

9.07 Selecting / combining linked programs

9.07.01 Selecting linked programs

Unlike sequences, linked programs can all be processed with one jig. To be able to select linked programs, individual seam programs must have been linked, see Chapter 9.07.02 Combining linked programs.

- Switch on the machine.
- Call up the menu for entering the program number.

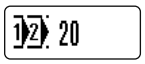

- Call up the menu for entering linked programs.

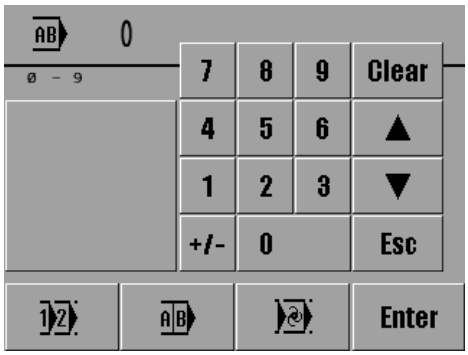

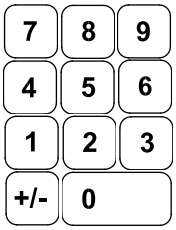

- Select the desired number for linked programs (0 – 9) using the number block.

- Confirm the selection and quit the selection menu.

Description of the other functions

Clear
This function sets the value at "0".

Arrow keys
These functions increase or reduce the value.

Esc
This function stops the input without taking over the value entered.

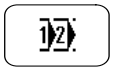

Program selection
This function opens the menu for selecting a program, see Chapter 9.05 Selecting a program number.

Sequence selection
This function opens the menu for selecting or configuring a sequence, see Chapter 9.06 Selecting / configuring a sequence.

Automatic program selection
When this function is active, the corresponding seam program is identified and sel

9.07.02 Combining linked programs

Up to 8 seam programs can be combined. After the corresponding program number has been selected during sewing, the combined seam programs appear as a function on the display and can be selected directly.

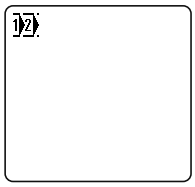

- Call up the menu for entering combined programs and select the desired number without leaving the selection menu, see Chapter 9.07.01 Selecting linked programs.
- Call up the combined programs programming function.

- Combine existing seam programs by entering the program numbers on the number block.

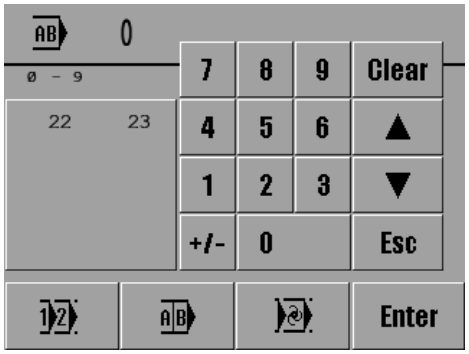

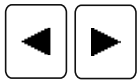

- The cursor in the window shows, which seam program has been taken out of the combination, or at which position a new seam program has been inserted. The cursor is moved with the arrow keys.

- If applicable, insert (INS) the seam program at the current cursor position, or delete (DEL) the marked seam program from the combination.

- Conclude programming.

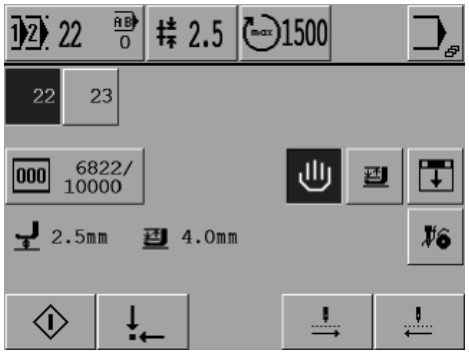

Switching among combined programs always takes place automatically.

9.08 Enter template monitoring/ template code

This function can only be selected if RFID device is attached. Parameter "202" must be set to value "1", see also chapter 13.09.02 Parameter list.

The template is marked with a code for template monitoring. Control recognises the code and prevents sewing with the wrong combination of seam program and template.

Template monitoring (parameter "109") must be activated (value "1") and the template code must be entered into the relevant seam programs.

- Switch machine on.

- Call up mode "Entry"

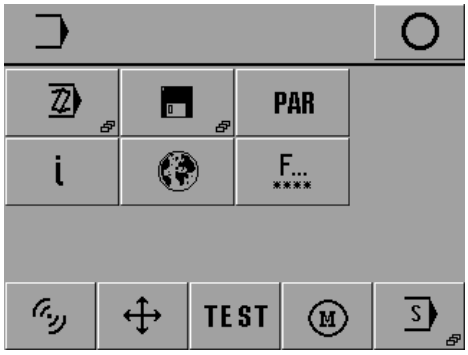

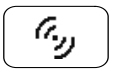

- Call up menu for entry of the template codes.

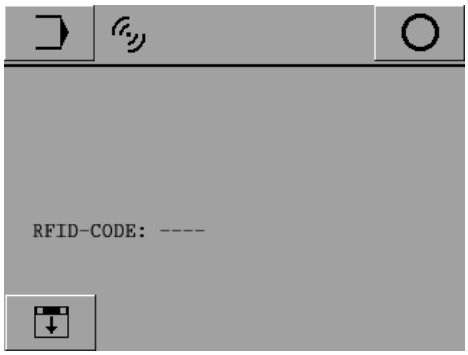

- Insert template.

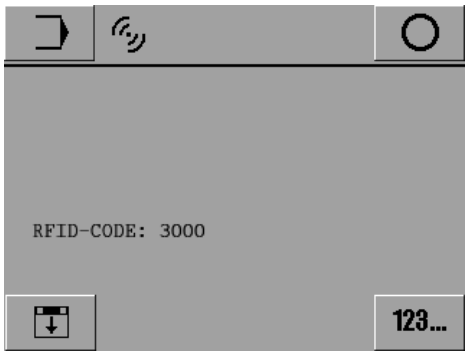

123... ● Call up mode "Code entry".

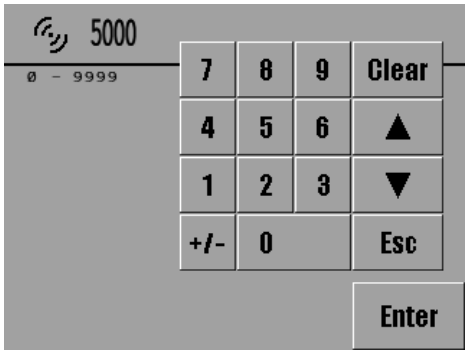

● Enter template code.

Enter ● Confirm entry.

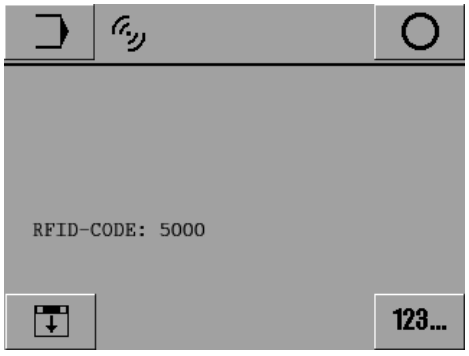

○ ● End template code entry.

9.09 Automatic program selection

9.09.01 Calling up the automatic program selection function

This function can only be selected if RFID device is attached. Parameter "**202**" must be set to value "**1**".

Alternatively template recognition can also be carried out via barcode (parameter "**202**" to value "**2**"). See also **chapter** 13**.09.02 Parameter list.**

In the automatic program selection, the relevant seam program is selected automatically via the program number stored on the template, e.g. program number and template code are identical, see also **chapter 9.09.02 Automatic program selection / enter program number**. The automatic program number selection (parameter "**109**") must be activated (value"**2**"), see also **chapter 13.09.02 Parameter list.**

- Switch on the machine.

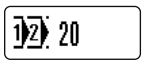

- Call up the menu for entering the program number.

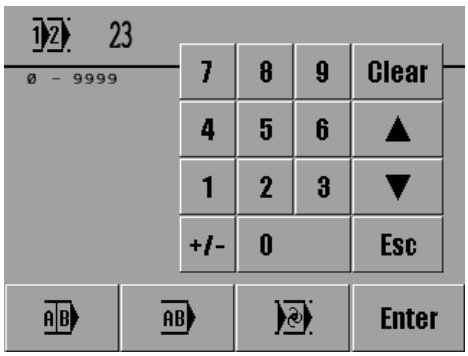

- Select the automatic program selection function.

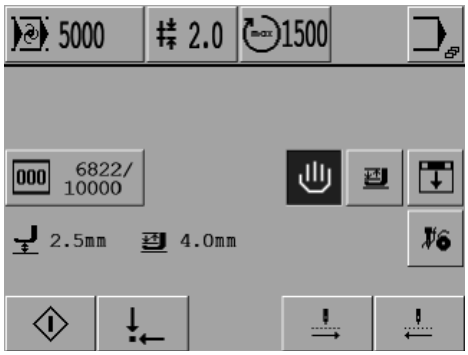

9.09.02 Automatic program selection/ enter program number

- Call up mode "Entry"

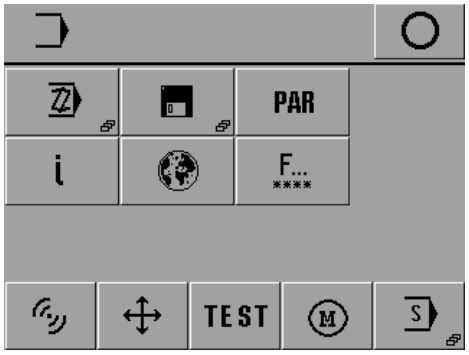

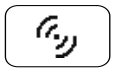

- Call up menu for entry of the template ID.

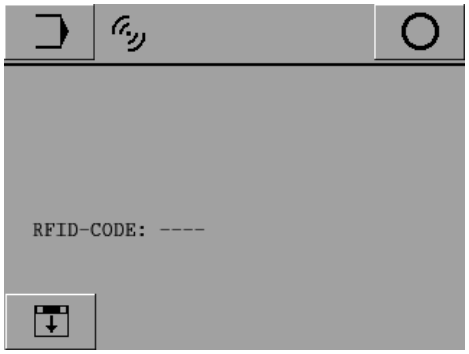

- Insert template.

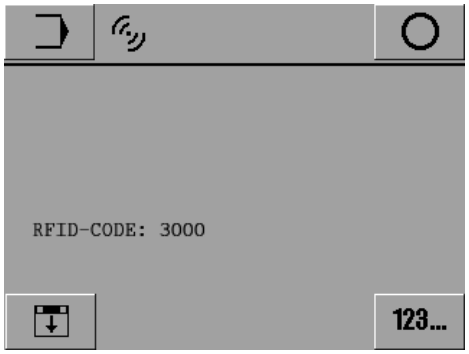

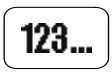

- Call up mode "Code entry".

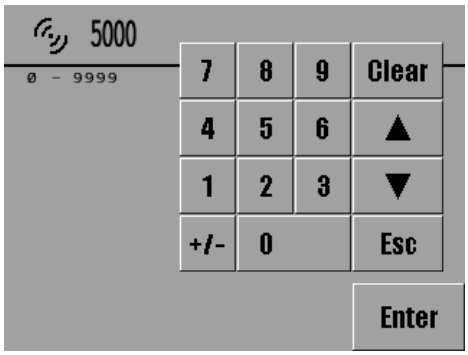

- Enter program number.

Enter

- Confirm entry.

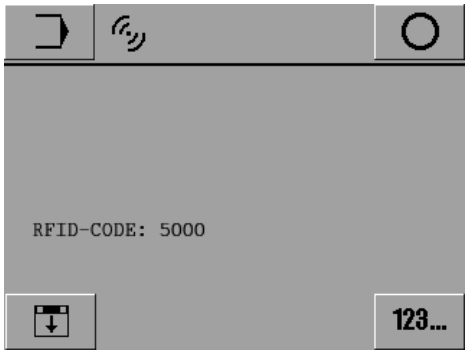

- End program number entry.

9.10 Setting the bobbin thread stitch counter

- Switch on the machine.

- Call up the menu for entering the number of bobbin thread stitches.

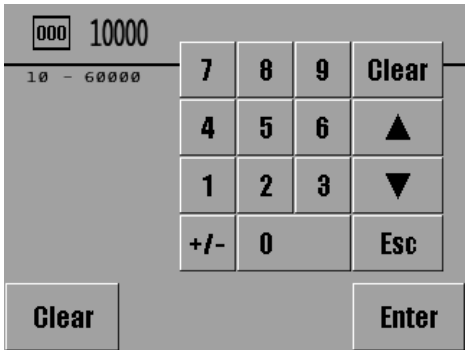

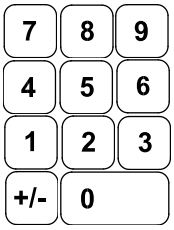

- Enter the number of stitches on the number block.

- Conclude the input.

After sewing the number of bobbin thread stitches, the machine stops automatically for changing the bobbin.

Description of the other functions

Clear (on number block)
This function sets the input value at "0".

Arrow keys
These functions increase or reduce the value.

Esc
This function stops the input without taking over the value entered.

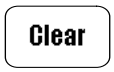

Clear (in foot text)
This function sets the bobbin thread counter (number of stitches sewn) at "0".

10 Sewing

The machine may only be operated by appropriately instructed personnel! The operating staff must make sure that only authorized persons are in the danger area of the machine!

In particular for the production, in addition to the input mode, see Chapter **11 Input**, the sewing mode is available. Here, depending on the program selection and the machine status, all relevant functions and settings for the production are shown on the display. Automatic operation is standard, but it is possible to switch to manual operation when setting up and checking operating sequences.

Before production the following conditions must be fulfilled:

- All safety devices must be attached and all covers closed see, Chapter **1.06 Danger warnings**.
- The machine must be properly installed and commissioned in accordance with Chapter **8 Installation and commissioning**.
- All setting-up work must have been carried out, see Chapter **9 Setting-up**.

10.01 Sewing with individual programs

- Switch on the machine.
- Select the desired program number, see Chapter **9.05 Selecting a program number.**

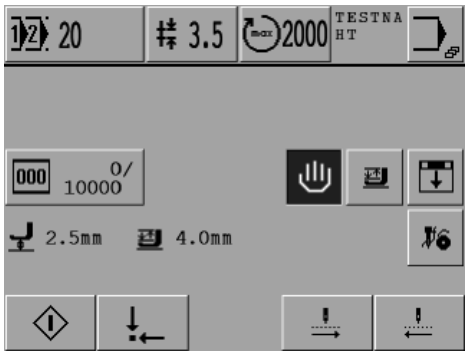

- Insert the jig.

- Close the jig indexing function .

- Start the sewing cycle.

Description of the functions

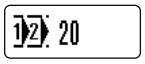

Program number selection
This function opens the menu for entering the program number. The current program number is shown in the symbol together with the appropriate parts program number.

Standard stitch length
This function opens the menu for entering the standard stitch length. The current stitch length is shown in the symbol.

Maximum speed
This function opens the menu for entering the maximum speed. The current maximum speed is shown in the symbol.

Comment
Here a comment assigned to the program is indicated.

Input menu
This function is used to call up the "input mode" see Chapter **11 Input**.

Bobbin thread stitch counter
This function opens the menu for entering and resetting the number of stitches for the bobbin thread, see Chapter **9.09 Setting the bobbin thread stitch counter**.

Manual / automatic program start
This functions changes between automatic and manual program start. The corresponding symbol of the current operating status is shown respectively.

In the case of a manual program start, the jig is locked into position and the sewing cycle is started by operating the foot switch or by calling up the "open/close jig" and "start" functions.

In the case of an automatic program start, the jig is automatically locked into position when inserted and the sewing cycle starts automatically.

Vibrating presser up / down
This function is used to raise or lower the vibrating presser. In addition the thread clamp is opened or closed.

Search (only within the program cycle)
With this function the sewing head is raised and the carriage can be moved near the desired seam pattern point with appropriate direction symbols. After the position has been confirmed, the machine moves towards the nearest point of the seam pattern.

Tacting forwards
This function is used to move forwards in sections in the seam pattern tact for tact. The seam cycle is sewn automatically, if the function is pressed longer.

Tacting backwards
This function is used to move backwards in sections in the seam pattern tact for tact.
The seam cycle is sewn automatically, if the function is pressed longer.

Basic position
This function is used to move the jig guide, sewing station and clamp drive unit to the basic position.

Threading aid

Via this function, the machine is driven to service position. The thread clamp opens, the vibrating pressur foot and retainer are lowered..

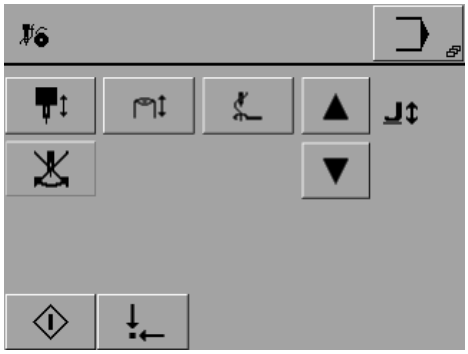

Sewing head up/down

Counter presser up/down

De-pressurise thread wiper or return to home position

Drive vibrating pressur foot up or down
Current position is displayed

Needle turning device / Bobbin thread slide

This function is used to switch the Needle turning device / Bobbin thread slide on or off.

10.02 Sewing with sequences

To sew with the function for moving automatically to the next sequence, parameter "114" must be set at value "1", see Chapter 13.09.02 List of parameters.

- Switch on the machine.
- Select the desired sequence, see Chapter 9.06.01 Selecting a sequence.

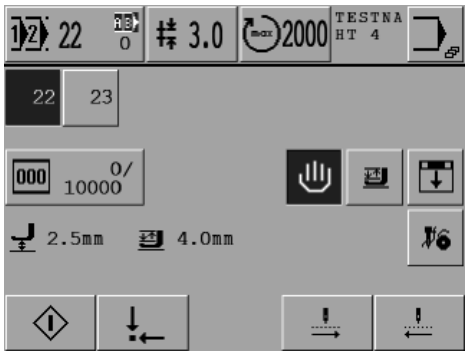

- Insert the jig
- Start sewing process (only available if manual program start is selected).

Description of the functions

Program number selection
This function opens the menu for entering the program number. The current program number is shown in the symbol. If the function for moving automatically to the next sequence is activated, the sequence symbol is shown as inverse.

Standard stitch length
This function opens the menu for entering the standard stitch length. The current stitch length is shown in the symbol.

Maximum speed
This function opens the menu for entering the maximum speed. The current maximum speed is shown in the symbol.

Comment
Here a comment assigned to the program is indicated.

Input menu
This function is used to call up the "input mode" see Chapter 11 Input.

Individual program
This function depends on the setting of parameter "114" (moving automatically to next sequence), see Chapter 13.09.02 List of parameters.
If the function for moving automatically to the next sequence is activated (value "I", this) function is used to show the symbol for the next individual program to be sewn as inverse.
If the function for moving automatically to the next sequence is deactivated (value "0",) this function is used for the quick selection of the highlighted seam programs.

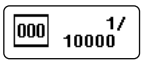

Bobbin thread stitch counter
This function opens the menu for entering and resetting the number of stitches for the bobbin thread, see Chapter 9.10 Setting the bobbin thread stitch counter.

Vibrating presser up / down
This function is used to raise or lower the vibrating presser. In addition the thread clamp is opened or closed.

Search (only within the program cycle)
With this function the sewing head is raised and the carriage can be moved near the desired seam pattern point with appropriate direction symbols. After the position has been confirmed, the machine moves towards the nearest point of the seam pattern.

Threading aid
Via this function, the machine is driven to service position. The thread trapper opens, the vibrating pressur foot and press pad are lowered.

Basic position

This function is used to move the machine to the basic position.

Tacting forwards

This function is used to move forwards in sections in the seam pattern tact for tact. The seam cycle is sewn automatically, if the function is pressed longer.

Tacting backwards

This function is used to move backwards in sections in the seam pattern tact for tact. The seam cycle is sewn automatically, if the function is pressed longer.

10.03 Sewing with linked programs

- Switch on the machine.
- Select the desired number for linked programs, see Chapter **9.07.01 Selecting linked programs.**

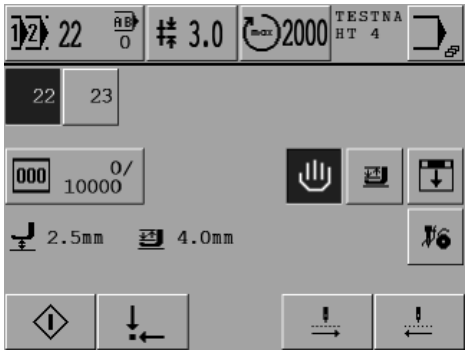

- Insert the jig.
- Start sewing process (only available if manual program start is selected).

Description of the functions

Program number selection
This function opens the menu for entering the program number. The current program number is shown in the symbol.

Standard stitch length
This function opens the menu for entering the standard stitch length. The current stitch length is shown in the symbol.

Maximum speed
This function opens the menu for entering the maximum speed. The current maximum speed is shown in the symbol.

Comment
Here a comment assigned to the program is indicated.

Input menu
This function is used to call up the "input mode" see Chapter **11 Input.**

Individual programs
With these functions it is possible to select the next individual program due to be processed.

Bobbin thread stitch counter
This function opens the menu for entering and resetting the number of stitches for the bobbin thread, see Chapter **9.09 Setting the bobbin thread stitch counter.**

Manual/ automatic program start

This function toggles between automatic and manual program start. The relevant symbol for the current operations mode is displayed.

In a manual program start, fixing the template and starting of the sewing process is carried out by pressing the treadle switch, or by calling the functions "Open/close template" and "Start".

If automatic program start is selected, the template is automatically fixed when inserted, and the sewing process starts automatically.

Vibrating presser up / down

This function is used to raise or lower the vibrating presser. In addition the thread clamp is opened or closed.

Search (only within the program cycle)

With this function the sewing head is raised and the carriage can be moved near the desired seam pattern point with appropriate direction symbols. After the position has been confirmed, the machine moves towards the nearest point of the seam pattern.

Threading aid

Via this function, the machine is driven to service position. The thread trapper opens, the vibrating pressur foot and press pad are lowered.

Basic position

This function is used to move the machine to the basic position.

Tacting forwards

This function is used to move forwards in sections in the seam pattern tact for tact. The seam cycle is sewn automatically, if the function is pressed longer.

Tacting backwards

This function is used to move backwards in sections in the seam pattern tact for tact. The seam cycle is sewn automatically, if the function is pressed longer.

10.04 Sewing with automatic program selection

For sewing with automatic program selection, the parameter "109" must be set at "2", see Chapter 13.09.02 List of parameters

- Switch on the machine.
- Select the automatic program selection function, see Chapter 9.09.01 Automatic program selection.

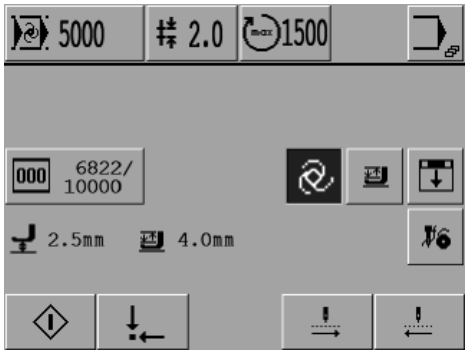

- Insert the jig.
- Close the jig indexing function (only if manual program start has been selected).
- Start the sewing cycle (only if manual program start has been selected).

Description of the functions

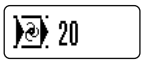

Program number selection
This function opens the menu for entering the program number. The current program number is shown in the symbol.

Standard stitch length
This function opens the menu for entering the standard stitch length. The current stitch length is shown in the symbol.

Maximum speed
This function opens the menu for entering the maximum speed. The current maximum speed is shown in the symbol.

Input menu
This function is used to call up the "input mode" see Chapter 11 Input.

Bobbin thread stitch counter
This function opens the menu for entering and resetting the number of stitches for the bobbin thread, see Chapter 9.10 Setting the bobbin thread stitch counter.

Manual / automatic program start
This functions changes between automatic and manual program start. The corresponding symbol of the current operating status is shown respectively.

In the case of a manual program start, the jig is locked into position and the sewing cycle is started by operating the foot switch or by calling up the "open/close jig" and "start" functions.

In the case of an automatic program start, the jig is automatically locked into position when inserted and the sewing cycle starts automatically.

Vibrating presser up / down

This function is used to raise or lower the vibrating presser. In addition the thread clamp is opened or closed.

Search (only within the program cycle)

With this function the sewing head is raised and the carriage can be moved near the desired seam pattern point with appropriate direction symbols. After the position has been confirmed, the machine moves towards the nearest point of the seam pattern.

Threading aid

Via this function, the machine is driven to service position. The thread trapper opens, the vibrating pressur foot and press pad are lowered.

Basic position

This function is used to move the machine to the basic position.

Tacting forwards

This function is used to move forwards in sections in the seam pattern tact for tact. The seam cycle is sewn automatically, if the function is pressed longer.

Tacting backwards

This function is used to move backwards in sections in the seam pattern tact for tact. The seam cycle is sewn automatically, if the function is pressed longer.

10.05 Program interruption

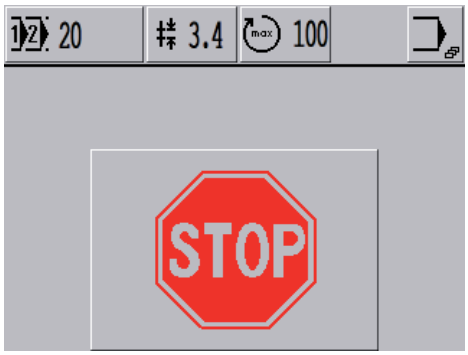

- A program sequence can be interrupted by pressing the "stop" key on the control panel.

When the machine is stopped this way, the sewing head and template drive will not be in their respective home positions!

- Continue program cycle

For a more detailed explanation of additional functions see **chapter 10.01 Sewing with individual programs**.

10.06 Error messages

If a malfunction occurs, an error code appears on the display. An error message may be caused by incorrect operation, machine defects, as well as by overload conditions.
(For a description of the error codes see Chapter 14.02 Description of the error codes).

Errors when connecting outputs
If an error occurs when connecting an output, the output concerned is shown with the desired switching state (0) or (I).
In this case (0) means the output should be disconnected and (I) means that the output should be connected.
In the next line the cause leading to the error is displayed.

The target state is shown in parentheses to achieve an error-free process.
In the following example, output Y50.2 should be activated.
Condition: Y8 must be set to (0).

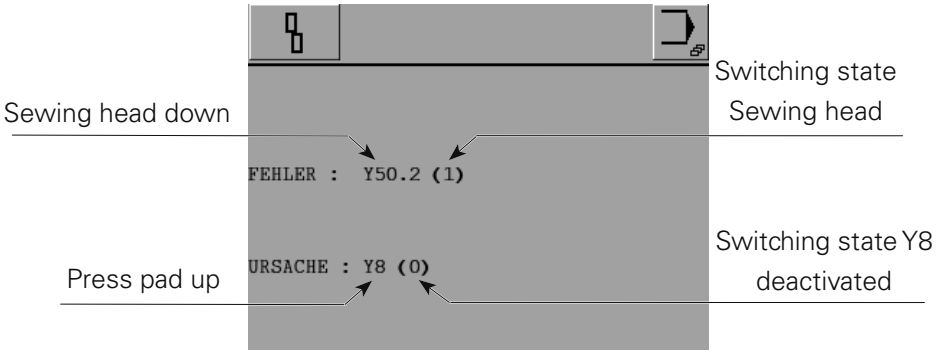

- Check Y8 and eliminate error.

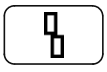

- Acknowledge elimination of the error..

11 Input

In addition to the functions for entering or altering seam programs, in the input mode there are functions for displaying information, for program management, for machine configuration and settings (country settings and access codes etc.), as well as for supporting service and adjustment work.
In the input mode the machine start function is blocked to avoid an unintentional start-up of the machine.

11.01 Overview of the functions in the input mode

- Switch on the machine.

- Call up the input mode.

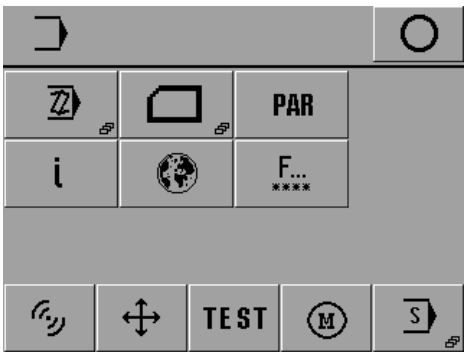

Description of the functions

Description of the functions

Conclude input
This function is used to conclude the input, and the machines changes to the sewing mode.

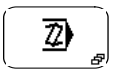

Seam program input
This function is used to call up the menu for entering or altering seam programs, see Chapter 11.02 Creating / altering seam programs.

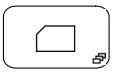

Program management
This function is used to manage the data from the machine memory and CD-Card, see Chapter 11.04 Program management.

Parameter settings
This function is used to call up the menu for altering parameter settings, see Chapter 13.09 Parameter settings.

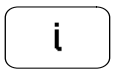

Info

This function opens a menu for displaying the following information:

- current software status of the machine
- current firmware status of the machine
- current firmware status of the control panel
- current firmware status of the motor
- day piece counter
- operating hours meter
- production hours meter

The day piece counter can be reset with the "Clear" function.

Country settings

This function opens a menu for selecting the language shown on the control panel, see Chapter **8.05 Selecting the language and units**.

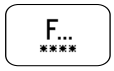

Rights of access

This function opens a menu for fixing the rights of access, see Chapter **11.05 Rights of access.**

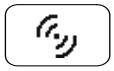

Template code

This function calls up the menu for template code entry, see **chapter 9.08 Template monitoring / template code entry** or **9.09.02 Automatic program selection/ enter program number** .

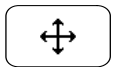

Stepping motors

This function opens a menu for moving the stepping motors.

Test template drive

This function opens a menu for calling and running a program for testing the reference points of the template drive, see **chapter 13.06.04 Reference points of the template drive**.

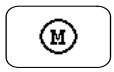

Sewing motor

This function opens a menu for testing and adjusting the sewing motor, see Chapter **13.08 Menu for the sewing motor.**

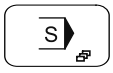

Service menu

This function is used to call up the menu for selecting various service functions, see Chapter **13.07 Service menu.**

11.02 Creating / altering seam programs

- Switch on the machine.

- Call up the input mode.

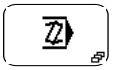

- Call up the seam program input function.

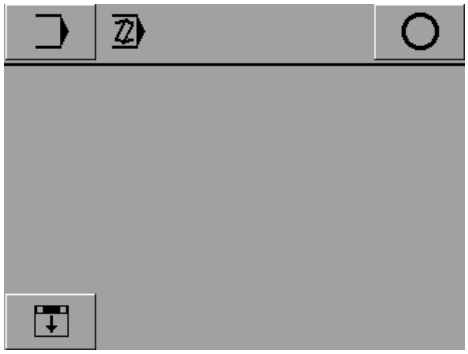

- Insert the jig.

- Close the jig indexing function.

- Confirm the operation.

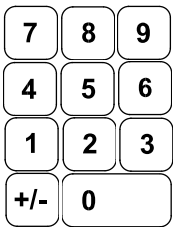

- Reinsert the desired program number or select the desired program.

- Confirm the seam number selection.

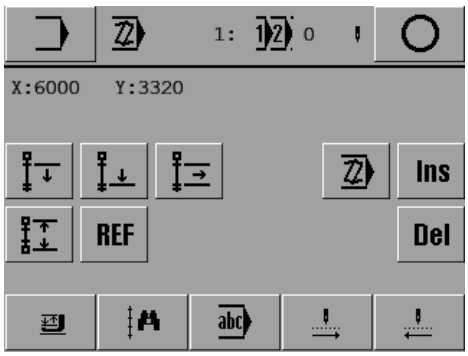

Depending on machine configuration, the selection of a single-needle or two-needle programme is important. A resetting of the programme can be done via the function 'Modify'.

Description of the functions

Input menu

This function ends the programming operation and opens the basic input menu, see Chapter 11.01 Overview of the functions in the input mode.

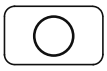

Conclude input
This function is used to conclude the input, and the machines changes to the sewing mode.

Mark block start
This function is used to define the start of a block, see Chapter 11.02.02 Block functions.

Mark block end
This function is used to define the end of a block, see Chapter 11.02.02 Block functions.

Block functions
This function opens a menu for entering block functions, see Chapter 11.02.02 Block functions.

Image functions
This function opens a menu for entering image functions, see Chapter 11.02.03 Image functions.

Coordinate reference points
This function is used to set the coordinates on the display at "0", in this way creating a new reference point.

Edit
After selecting this function, the current section can be edited.

Insert
This function is used to insert functions or blocks, see Chapter 11.02.04 Inserting functions.

Delete
This function is used to delete the current section.

Sewing foot up/down
This function is used to raise or lower the sewing foot. In addition the thread trapper is opened or closed.

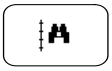

Search
With this function the sewing head is raised and the carriage can be moved near the desired seam pattern point with appropriate direction symbols. After the position has been confirmed, the machine moves towards the nearest point of the seam pattern.

Comment
This function opens a menu for entering a comment on the current program, see Chapter 11.02.01 Entering a comment.

Tacting forwards
This function is used to move forwards in sections in the seam pattern tact for tact. The seam cycle is sewn automatically, if the function is pressed longer.

Tacting backwards
This function is used to move backwards in sections in the seam pattern tact for tact. The seam cycle is sewn automatically, if the function is pressed longer.

11.02.01 Entering a comment

In the seam programming function, it is possible to add a comment to the seam program, after calling up the appropriate function. The comment is displayed as information about the corresponding seam program with the program selection function and the program management function.

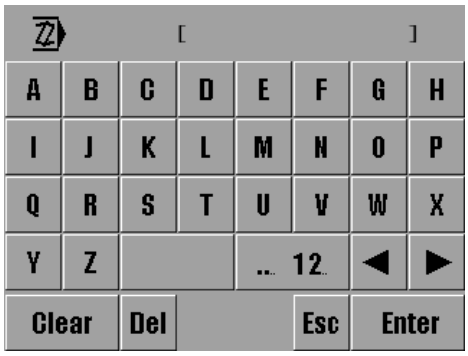

P R G
- Enter the desired text, e.g. "PRG".

... 12
- Change to number input.

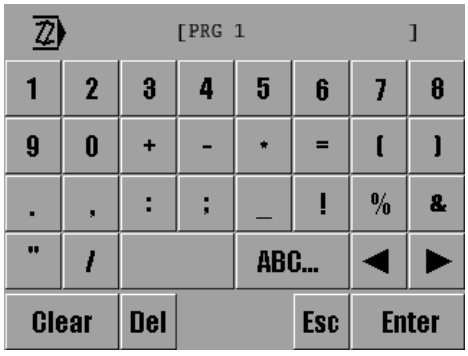

1
- Enter the desired number, e.g. "1".

Enter
- Conclude the comment input.

11.02.02 Block functions

- Switch on the machine.

- Call up the input mode.

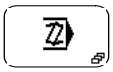

- Call up the seam program input function.

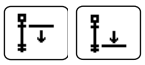

- Define block start and block end
  After a desired point in the program has been selected with the tacting through the program function, it is possible to define the block start with the "mark block start" function. The block marking must be concluded by defining a block end. To do so, tact through the program till reaching the desired point and then operate the "mark block end" function. When tacking through the program, the marked block can be recognised by the inverse symbol of the section number.

- Call up the block functions.

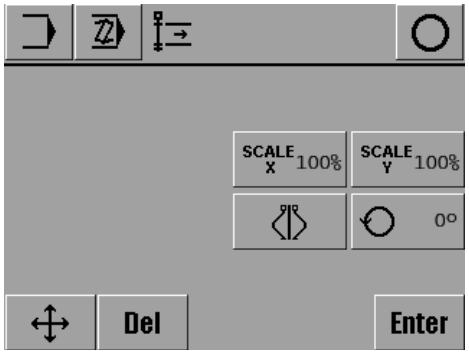

Description of the functions

Conclude input
This function is used to conclude the input, and the machine changes into the sewing mode.

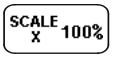

Enlargement factor X-axis
This function is used to enlarge or reduce the block in the X-direction.

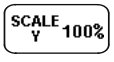

Enlargement factor Y-axis
This function is used to enlarge or reduce the block in the Y-direction.

Mirror
This function is used to mirror the block. Mirroring takes place on the straight line, which runs parallel to the Y-axis and through the block start point.

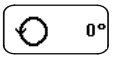

Turn
This function is used to turn the block. The block is turned around the block start point in an anti-clockwise direction.

Shift block

After this function has been selected, a new point must be approached with the jig drive. With the enter function, this point is taken over and the block shifted.

Delete

When this function is selected, the block is deleted.

Enter

Conclude the block function input and carry out block manipulation.

11.02.03 Image functions

- Switch on the machine.

- Call up the input mode.

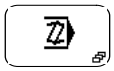

- Call up the seam program input function.

- Call up image functions.

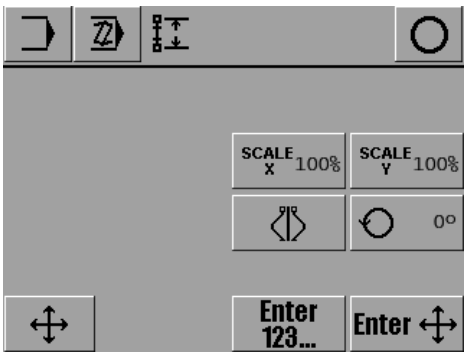

Description of the functions

Conclude input
This function is used to conclude the input, and the machine changes into the sewing mode.

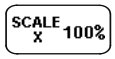

Enlargement factor X-axis
This function is used to enlarge or reduce the image in the X-direction. The operation is concluded by selecting the point of symmetry either with the number keys or with the control keys.

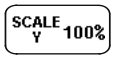

Enlargement factor Y-axis
This function is used to enlarge or reduce the image in the Y-direction. The operation is concluded by selecting the point of symmetry either with the number keys or with the control keys.

Mirror
This function is used to mirror the image. The operation is concluded by selecting the point of symmetry either with the number keys or with the control keys.

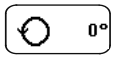

Turn
This function is used to turn the image. The image is turned in an anti-clockwise direction. The operation is concluded by selecting the point of symmetry either with the number keys or with the control keys.

Shift image
After this function has been selected, a new point must be approached with the jig drive. With the enter function, this point is taken over and the image is shifted from the current position to the end of the program.

Point of symmetry using number keys

The point of symmetry is defined by entering the coordinates with number keys.

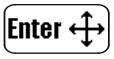

Point of symmetry using control keys

With this function the point of symmetry is approached (entered) by pressing the appropriate direction symbols.

11.02.04 Inserting functions

- Switch on the machine.

- Call up the input mode.

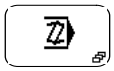

- Call up the seam program input function.

- Call up "insert" functions.

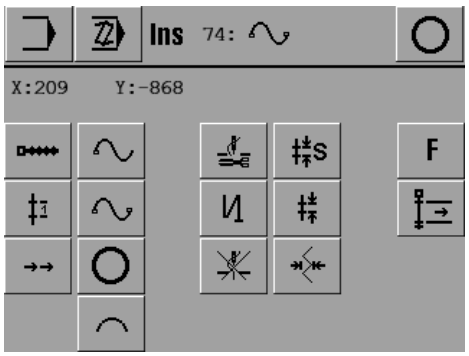

Description of the functions

Conclude input (in status bar)
This function is used to conclude the input, and the machine changes into the sewing mode.

Straight line
A straight line is a direct connection between two points.
To enter a straight line, a stitch length must be defined.

Single stitch
A single stitch or feed motion is entered without taking the stitch length into consideration.
The single stitch or feed motion can be max. 6 mm.

Fast motion
The fast motion function is used for the quick motion of the jig drive. Both axes are moved independently from each other to the end point as quickly as possible. The resulting distance moved is therefore not a straight line (watch out for obstacles on the jig). If the path has to be exact, it is necessary to work with a straight line or curve without start sewing.

Curve check points
It is possible to enter any number of check points. The control unit calculates the course of the curve, taking the stitch length into consideration. Check points do not necessarily have to be end points. A stitch length must be defined. The greater the number of check points entered, the more exact the course of the curve.

Curve end
This function changes a curve check point into a curve end point.

Circle

To enter a circle, three points are necessary. The first point is automatically the starting points. The two missing points still have to be entered. A stitch length must be defined.

Circular arc

For the circular arc the same applies as for the circle, whereby the last point defines the end of the circular arc.

Start sewing

This function is used to start sewing. All following sections are sewn until the thread trimming function is selected.

or

Thread trimming

The thread is cut. The start sewing function must have been activated previously.

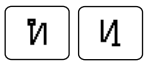

Bartacks

These functions are used to call up the menu for entering start and end bartacks. The menu is used to enter the number of forward and reverse stitches as well as the bartack stitch length.

Sewing off

This function is used to stop the sewing head without thread trimming. The subsequent feed motions are carried out without a sewing function. To restart sewing, the start sewing function must be programmed.

Standard stitch length

This function is used to define the stitch length, which will be used predominantly in the program. During sewing the standard stitch will be displayed in the status bar and can be altered on the machine with the stitch alteration function, without changing into the programming mode.

Stitch length

A stitch length is defined for a certain seam sector.

This stitch length is not displayed in the status bar during sewing and can only be altered in the programming mode.

Stitch width

This function carries out a zig-zag motion with the jig drive on the base line. Here the stitch length indicates the feed motion along the base line from needle penetration to needle penetration and must be selected accordingly. The stitch width is carried out vertically to the base line. The position of the zig-zag to the base line must also be defined. If the stitch width function is to be switched off, the width must be entered as 0.0.

Other functions

This function is used for the selection of more functions, see Chapter 11.02.05 Other functions.

Insert block

This function is used to insert a marked block after the current position.

11.02.05 Other functions

- Switch on the machine.

- Call up the input mode.

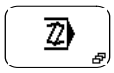

- Call up the seam program input function.

- Call up "insert" functions.

- Call up other functions.

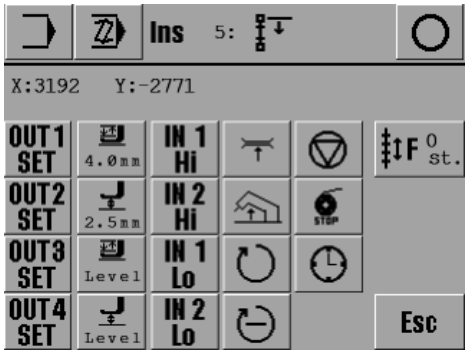

Description of the functions

Conclude input
This function is used to conclude the input, and the machines changes to the sewing mode.

Programmable outputs
The corresponding outputs (1 to 4) are activated with the menu.

Setting the vibrating pressur foot stroke
A value can be entered.

Setting the vibrating pressur foot level
A value can be entered.

Setting the level of the vibrating pressur foot stroke
With this function level (1 - 9) for the vibrating pressur foot stroke can be chosen.
With parameter 151 each level a value is allocated.

Setting the level of the vibrating pressur foot level
With this function level (1 - 9) for the vibrating pressur foot level can be chosen.
With parameter 150 each level a value is allocated.

Wait for input (inputs 1 to 2)
The processing of the program is stopped until the appropriate input (1 to 2) has reached the selected level.

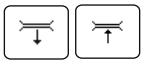

Secondary thread tension (depending on machine status)
This function is used to open or close the secondary thread tension.

Lifting the sewing head
This function allows the selection of a specific area, where carriage transports will be carried out with the sewing head lifted.

Speed
A speed is entered permanently in the program.

Reduced speed (depending on machine status)
This function is used to sew at a reduced speed or to switch off the reduced speed.

Programmed stop
A stop is programmed in the program.
Processing is continued by calling up the "start" function.

Bobbin thread stop
This function is used to define a stop position when bobbin thread error arises (parameter 101 = 4)

Wait for time
The processing of the program is stopped until the programmed time has elapsed.

Adjustment parameters
This function is used to adjust the activation or deactivation of various functions. The number of stitches is entered for activating or deactivating the corresponding function sooner or later.

Esc
Conclude input without taking over the inputs.

11.03 An example for programming a seam

Below is an example describing how to enter a seam program.
A seam sketch serves as a model. This is put into the gauge frame and digitised with a needle.

A prerequisite for the use of the seam program is that it matches the jig.

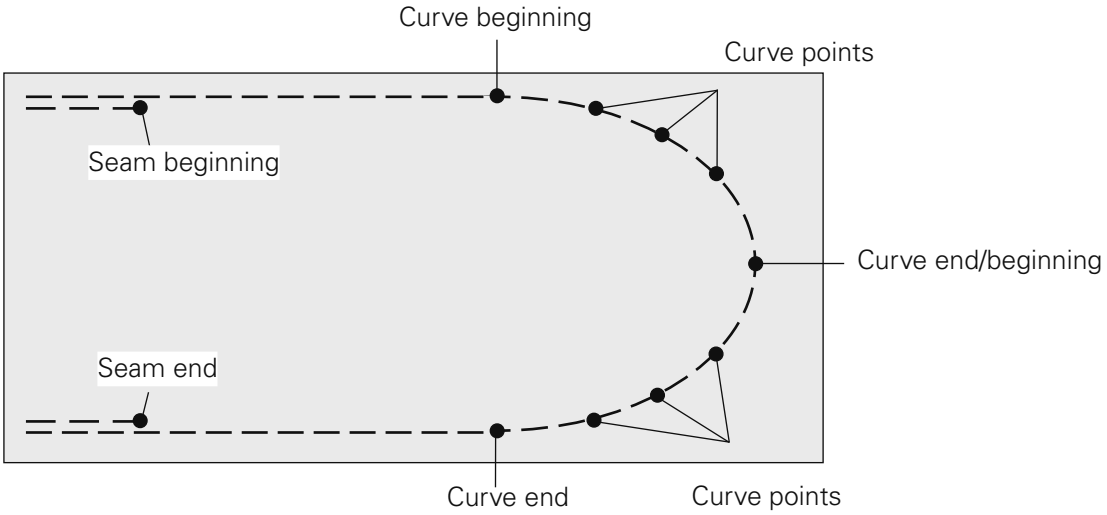

- Switch on the machine.

- Call up the input mode.

- Call up the seam program input function.

- If necessary, enter appropriate code number.

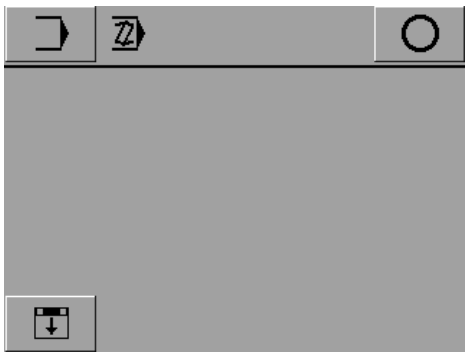

- Insert the jig.

- Close the jig indexing function.

Enter

- Confirm the operation.

7 8 9
4 5 6
1 2 3
+/- 0

- Enter desired program number (e.g. "5") to create a new seam program.

Enter

- Confirm program number selection

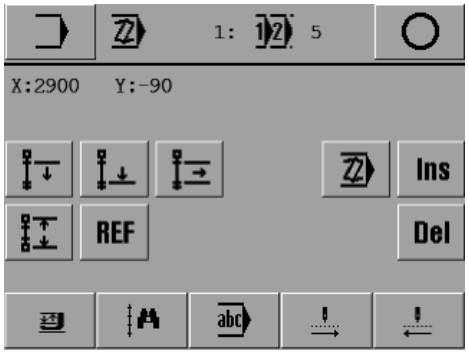

- Tact forwards.

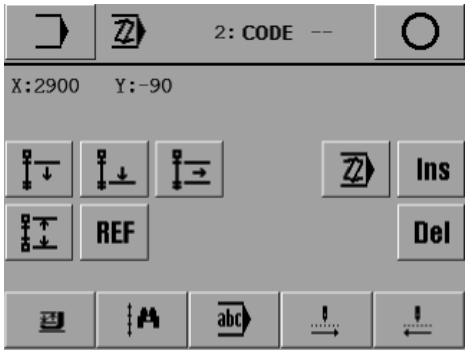

- Call up section editing function.

7 8 9
4 5 6
1 2 3
+/- 0

- Enter jig code (e.g. "99").

Enter

- Confirm input.

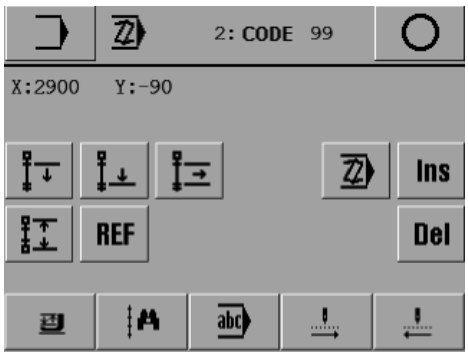

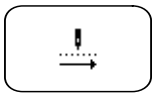

- Tact forwards. The jig moves to the starting position.

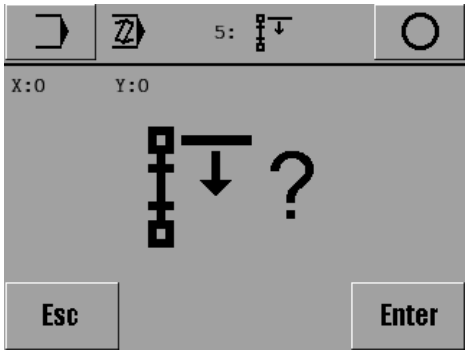

Esc

- Call up the "Esc" function, to change the starting point.

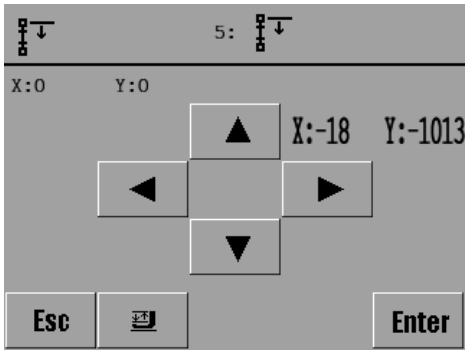

- Move to the starting point with the corresponding direction symbols, and check on the drawing with the needle.

Enter

- Save the setting.

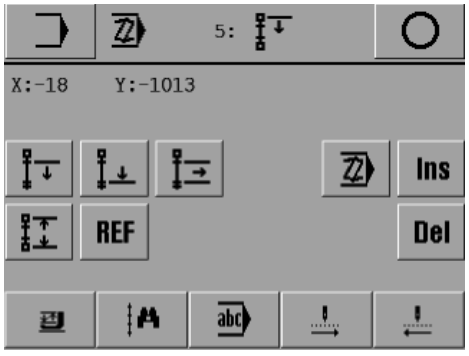

Ins

- Call up the "insert" function.

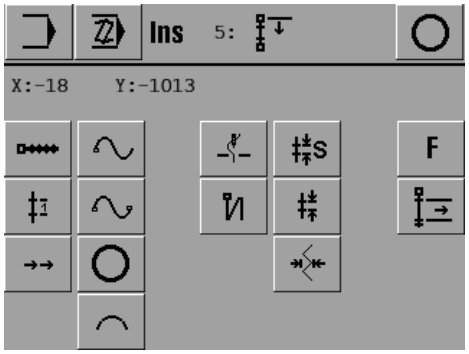

- Call up the "start sewing" function.

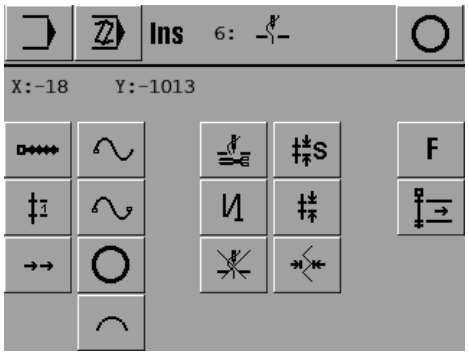

- Call up the "standard stitch length" function.

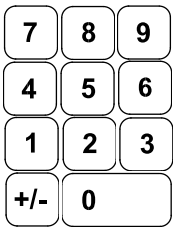

- Enter the value for the standard stitch length, e.g. 3.40 mm.

- Confirm input.

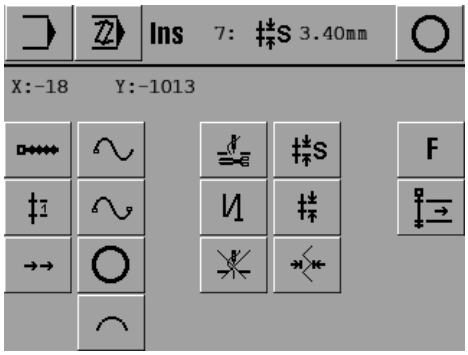

- Call up the "straight line" function to insert a straight line.
- Move to the end point of the straight line with the corresponding direction symbols.

- Save the setting.

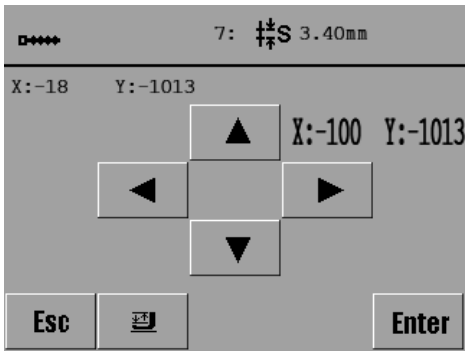

- Move to the next straight line end point with the corresponding direction symbols.

- Save the setting.

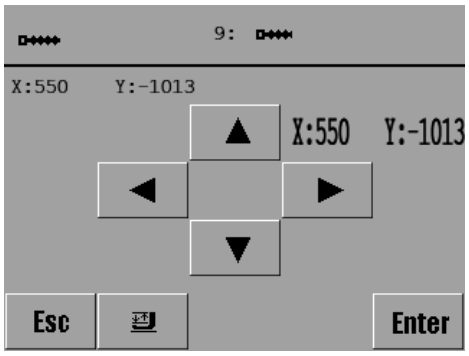

Esc
- Conclude straight line input.

- Call up the "curve point" function.

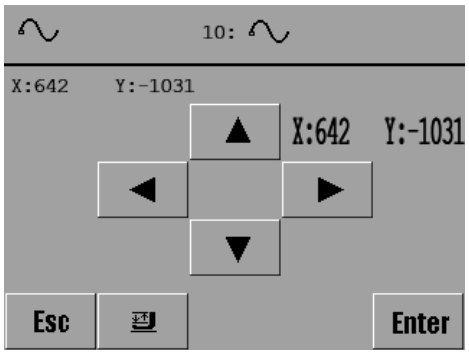

- Move to the first curve point with the corresponding direction symbols.

Enter
- Save the setting.
- Move to the second, third and fourth curve points with the corresponding direction symbols.

Enter
- Save each setting.

Esc
- Conclude curve points input.

- Call up "curve end" function (fourth Bezier curve is defined as curve end).

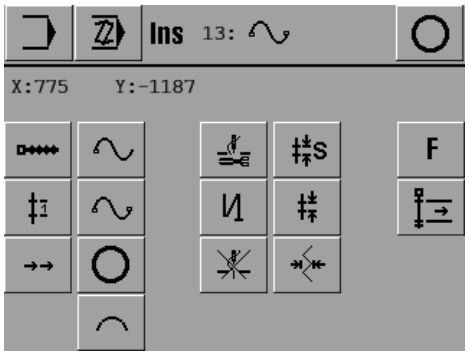

- Call up the "curve point" function.

- Move to the next curve point with the corresponding direction symbols.

Enter

- Save each setting.

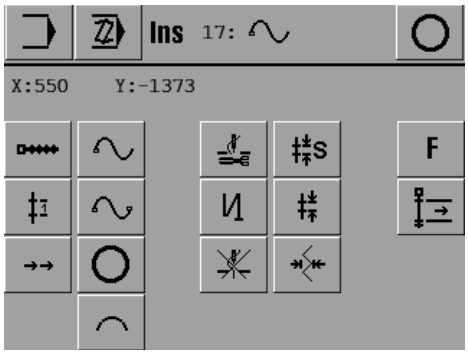

Esc

- Conclude curve points input.

- Call up "curve end" function.

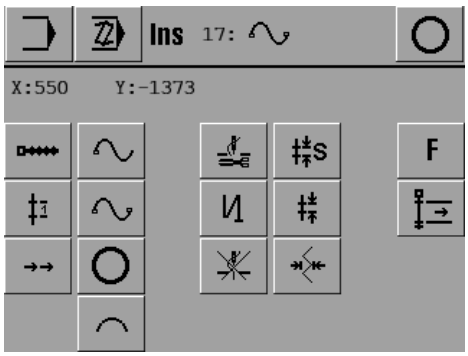

- Call up the "straight line" function to insert a straight line.
- Move to the end points of the straight line with the corresponding direction symbols.

Enter

- Save each setting.

Esc

- Conclude straight line input.

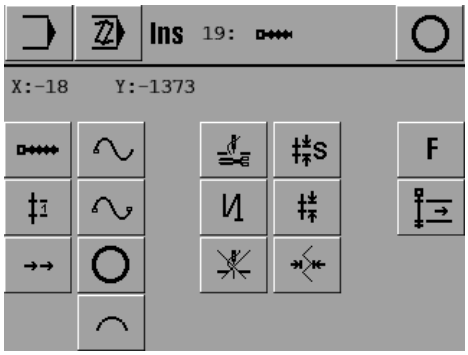

- Switch on the thread trimming function.

- Conclude the seam program input (function in status bar).

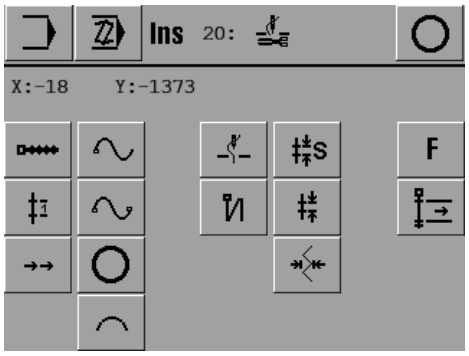

- Conclude the seam program input (function in status bar).

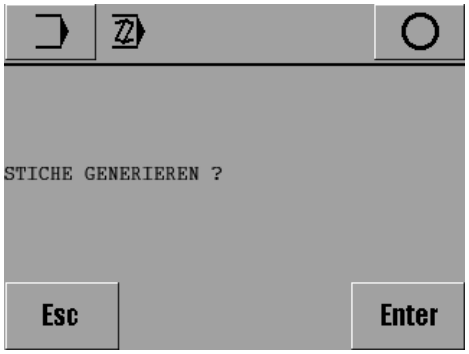

To be able to sew with the newly-created or edited seam program, the stitch generation must be carried out. Incomplete or incorrect programs also can be ended with the "Esc" function without stitch generation. In this case, when the seam program is called up in the sewing mode, an appropriate error message will appear.

Enter

- Carry out the stitch generation.

- Move to the basic position.

- After entering the appropriate program number, the created seam program can be selected and processed.

To begin with tact through a newly-created or corrected seam program on the machine, to make sure that it matches the jig!

11.04 Program management

The program management function is used to manage seam programs as well as configuration and machine data. **Files can be selected, copied and deleted from the machine memory of an SD card or a network (LAN).**

- Switch on the machine.

- Call up the input mode.

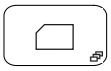

- Call up the program management function.

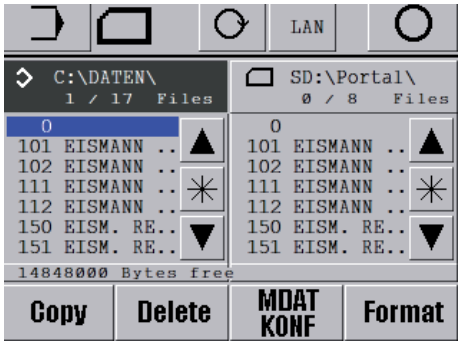

The following menu items are available in program management:

- Copying (deleting) machine data to the SD card
- Copying (deleting) machine data to a network (LAN)
- Copying (deleting) data from the SD card to the machine memory
- Copying (deleting) data from a network (LAN) to the machine memory
- Formatting the SD memory card

The currently selected data media with the relevant files will be shown on the display.
Example:
- Machine memory ("C:\DATA\") is currently selected
- SD card ( ) is currently inserted

he data carrier is selected by touching the appropriate box, and the content of the appropriate data carrier is also updated. The selected drive is shown as a invers symbol, the selected files are shown blue.

Seam programs are filed at a different level to that for the configuration and machine data, in order to avoid the configuration and machine data being processed by mistake.

Description of the functions

Input mode
This function is used to changed to the initial state of the input mode.

Update drives
This function is used to update (upload)the drives.

Network (LAN)
A previously specified directory in a network can be selected via this function.

Conclude input

This function is used to conclude the input, and the machines changes to the sewing mode.

Data selection

With these functions the desired files are marked in the current drive. Individual files are selected with the arrow keys. In combination with the lock key (*) several files can be selected at one time with the arrow keys.

Copy

This function is used to copy the files selected from the current data carrier onto the second data carrier.

Delete

This function is used to delete the selected files.

MDAD/KONF

This function is used to call up the level for the configuration and machine data. The current settings and the machine configuration are stored in the files "MDAT3590" and "KKONF3590. BIN". In this way the machine data can be copied on to a CD-Card as a backup, or several machines with the same designation can be configured quickly by reading the machine data.

Format

This function carries out the formatting of the inserted SD card for the machine.

During formatting, the directory "P3590" is created. Should the directory already exist, then all data contained therein will be deleted!

11.05 Rights of access

The functions, which can be called up with the control panel, are classified by code numbers and can be protected from unauthorised access. For this purpose, the control unit differentiates between 3 user groups (user 1, 2 and 3), all of which can be assigned a corresponding PIN. If a function is selected, for which the user does not have an authorisation, the user is requested to enter a PIN. After the appropriate PIN has been entered, the selected function is carried out. In addition to the 3 user groups, the control unit also recognises the so-called "super user", who, equipped with a key-switch, has access to all functions and who is authorised to stipulate the rights of access.

- Enter the key-switch and switch on the machine.

- Call up the input mode.

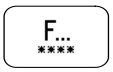

- Call up the menu for entering rights of access.

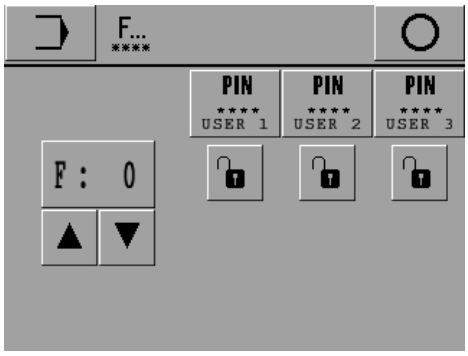

Description of the functions

Input mode
This function is used to change from the initial state to the input mode.

Conclude input
This function is used to conclude the input, and the machines changes to the sewing mode.

Entering the PIN
With this function an individual PIN for each user can be stipulated.

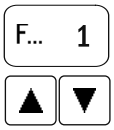

Function selection
These functions are used to select the code number for the function to be locked or released.

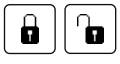

Locking/releasing
These functions are used to lock or release the function for the appropriate user.

Allocation of code numbers

Function	Symbol	Code number	Standard setting		
			User 1	User 2	User 3
Program number selection		0			
Enter stitch length		1			
Enter speed		2			
Input		3			
Create program		4			
Program management		5			
Parameter settings	PAR	6			
Parameter group 100 General settings	-	7*			
Parameter group 200 Seam parameters	-	8*			
Parameter group 300 Sewing motor positions	-	9*			
Parameter group 400 Times	-	10*			
Parameter group 500 Meters	-	11*			
Info		16			
Reset daily piece counter		17			
Reset bobbin thread stitch counter		18			
Reset operating hours meter		19			
Reset production hours meter		20			
Country settings		21			
Rights of access		22			
Moving stepping motors		25			
Testing jig drive	TEST	28			
Sewing motor functions		29			

Function	Symbol	Code number	Standard setting		
			User 1	User 2	User 3
RFID		31			
Service		23			
Carry out a cold start		24			
Move vibrating pressur foot		26			
Set vibrating pressur foot zero point		27			
Set zero points		30			

* These functions cannot be edited.

12 Care and maintenance

12.01 Maintenance intervals

Clean the entire machine	once a week
Clean the hook compartment	several times a day
Check oil level for head and hook lubrication	daily, before use
Check air pressure	daily, before use
Lubricate clamp guides	every 2 months
Exchange the sliding inlay of the template frame	every 6 months
Clean air filter of air filter/lubricator	As required
Clean fan air filter	As required

During all cleaning work the machine must be disconnected from the power supply by switching off the main switch or pulling out the plug!
Danger of injury if the machine is started accidentally!

12.02 Cleaning the machine

The cleaning cycle required for the machine depends on following factors:

- Single or multi-shift operation
- Amount of dust resulting from the workpiece

It is therefore only possible to stipulate the best possible cleaning instructions for each individual case.
To avoid breakdowns, the following cleaning work is recommended for single shift operation:

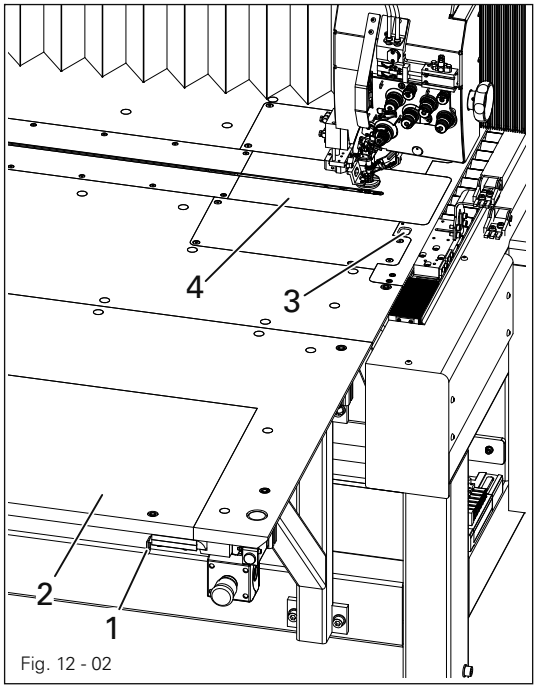

Fig. 12 - 02

- Switch on the machine.

- Call up the threading aid function; the machine travels to its "Service" position.
- Clean the entire machine.
- Open the latches **1** on the left and right, and swivel the table top part **2** at the front downward.
- Open the hook assembly cover **4** by pressing the button **3**.
- Clean hooker assembly and its space.

- Drive machine into its home position.

12.03 Check oil level of head assembly parts lubrication

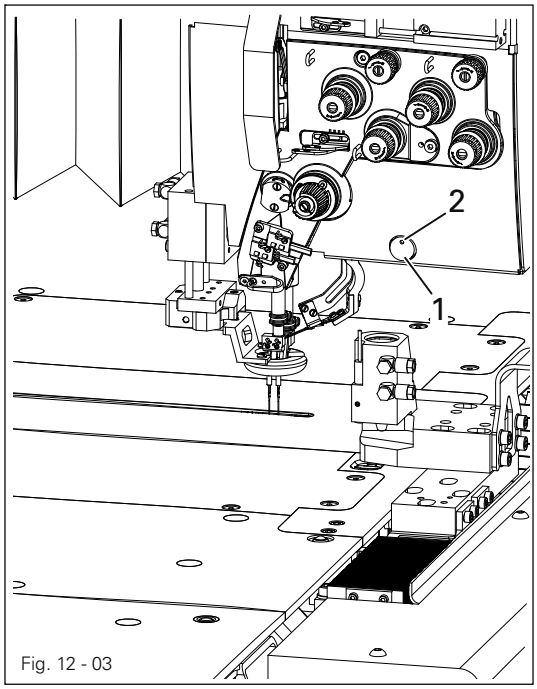

Fig. 12 - 03

- The oil fill level in container **1** must be checked daily.
- There must always be oil in container **1**.
- Refill oil via hole **2**.

Only use oil with a viscosity of **22.0 mm²/s** at **40° C** and a density of **0.865 g/cm³** at **15°C**!

We recommend PFAFF sewing-machine oil, part No. **280-1-120 144**.

12.04 Check oil level of hook lubrication

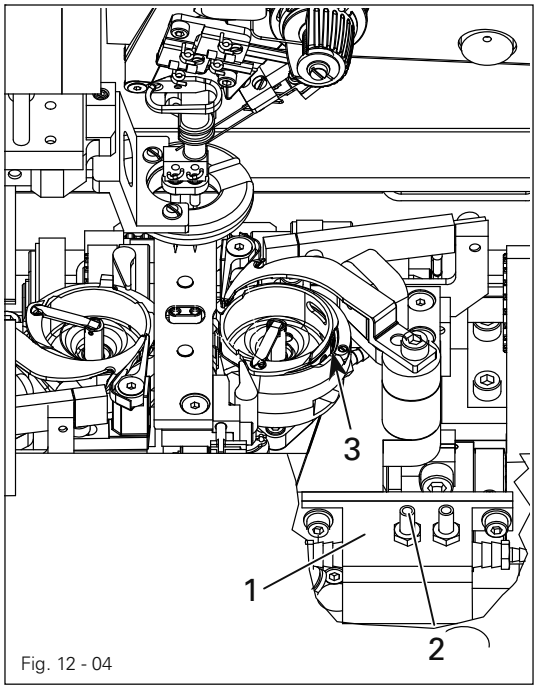

Fig. 12 - 04

- The oil fill level in container **1** must be checked daily.
- Open the hook assembly cover as described in Chapter **12.02**.
- There must always be oil in container **1**.
- Refill oil via hole **2**.

Only use oil with a viscosity of **22.0 mm²/s** at **40° C** and a density of **0.865 g/cm³** at **15°C**!

- Add a few extra drops of oil onto the hook **3** race at initial commissioning, or if the machine has been standing still for a prolonged period of time.

We recommend PFAFF sewing-machine oil, part No. **280-1-120 144**.

12.05 Lubricate head assembly and template guide

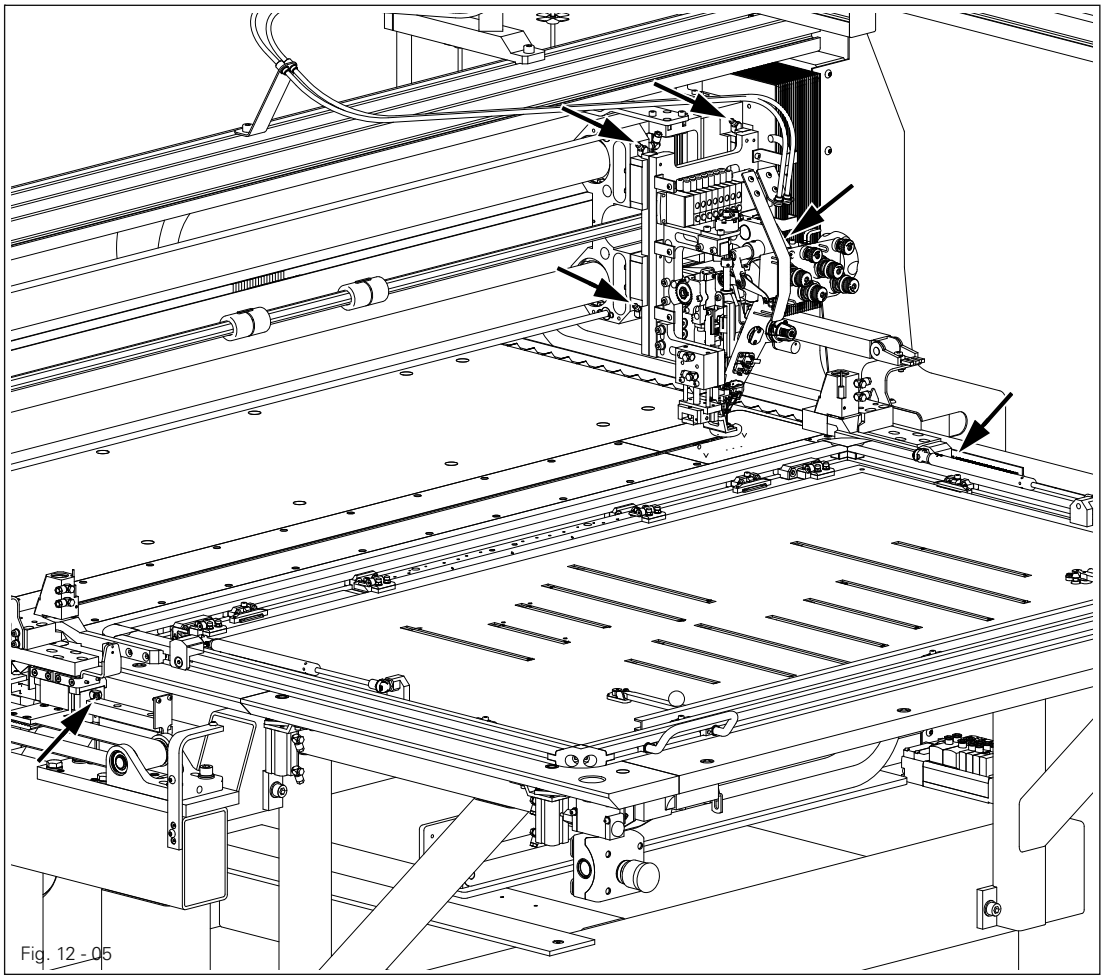

Fig. 12 - 05

Switch off the machine and take measures to prevent it being switched on again!

Only use Isoflex **Topas L32** high-performance grease, part no. **280-1-120 210**.

- The guides listed below must be greased via the grease nipples using a grease gun. For single-shift operation **every 2 months**, for double-shift operations each month.
- Unscrew and remove the bellows body of the head drive and grease the nipples on both sides of the head assembly with a grease gun (see arrows).
- Unscrew and remove the cover and bellows on both sides of the template drive, and use a grease gun to lubricate the grease nipples (see arrows).
- Replace the covers and screws.

12.06 Exchange the sliding inlay of the template frame

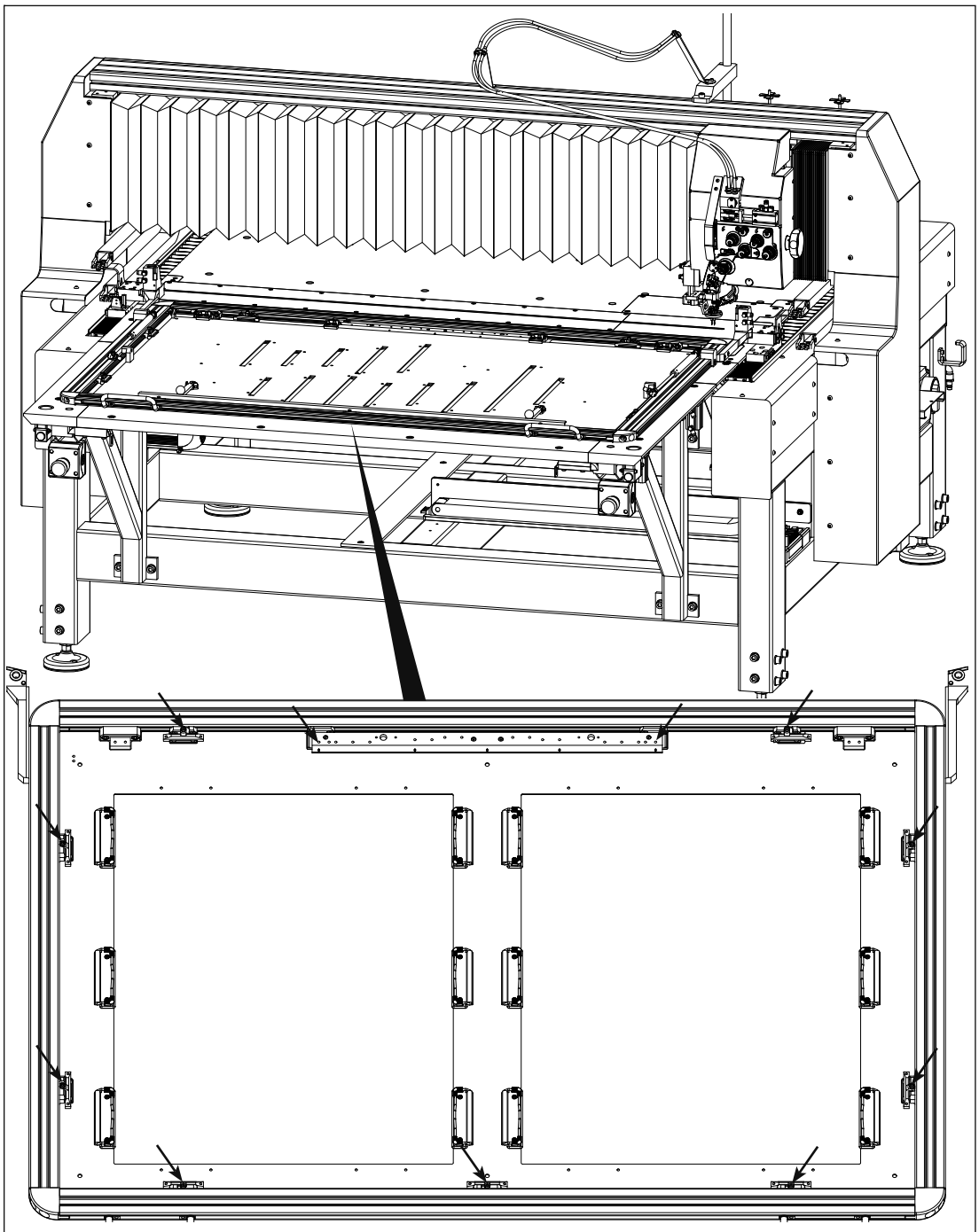

Fig. 12 - 06

At single shift operation change the sliding inlays every **6 months**.

- Take out the template.
- Unscrew the arrows marked screws and push out the used sliding inlays downward, through the drill/ holes.
- Clean the drill holes and bond the new sliding inlays (Part No.: **95-778 351-05**) from bottom with a removable adhesive.
- We recommend the adhesive "UHU-PLUS".

12.07 Checking/adjusting the air pressure

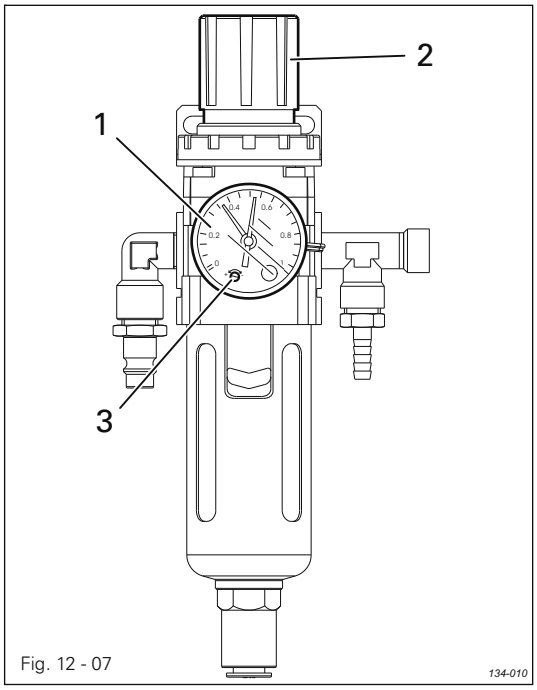

Fig. 12 - 07

- Before operating the machine, always check the air pressure on gauge1.
- Gauge **1** must show a pressure of 6 bar.
- If necessary adjust to this reading.
- To do so, pull knob **2** upwards and turn it so that the gauge shows a pressure of **6** bar.

Configuration of the pressure controller:

- Turn screw **3** until the green arrow points to **4.5** bar.
  The machine is automatically switched off if a pressure of < **4.5** bar is reached, and can be automatically reactivated, once pressure reaches a value > **5.0** bar.

Bar	MPa	psi
4,5	= 0,45	= 65
5	= 0,5	= 73
6	= 0,6	= 87

12.08 Cleaning the air filter of the air-filter/lubricator

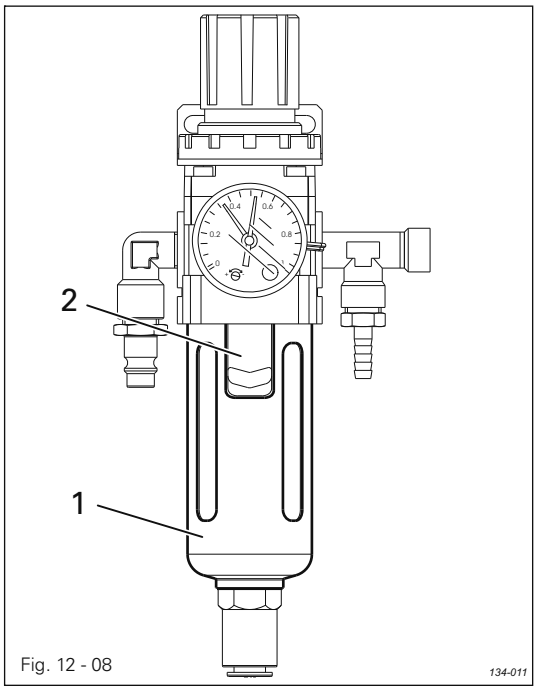

Fig. 12 - 08

Switch the machine off!
Disconnect the air hose at the air-filter/lubricator.

To drain water bowl **1**:

- Water bowl **1** drains itself automatically when the compressed-air hose is disconnected from the air-filter/lubricator.

Cleaning filter **2**:

- Unscrew water bowl **1**.
- Take out filter **2**.
- Clean filter **2** with compressed air or isopropyl alcohol (part No. **95-665 735-91**).
- Screw in filter **2** and screw on water bowl **1**.

12.09 Clean fan air filter

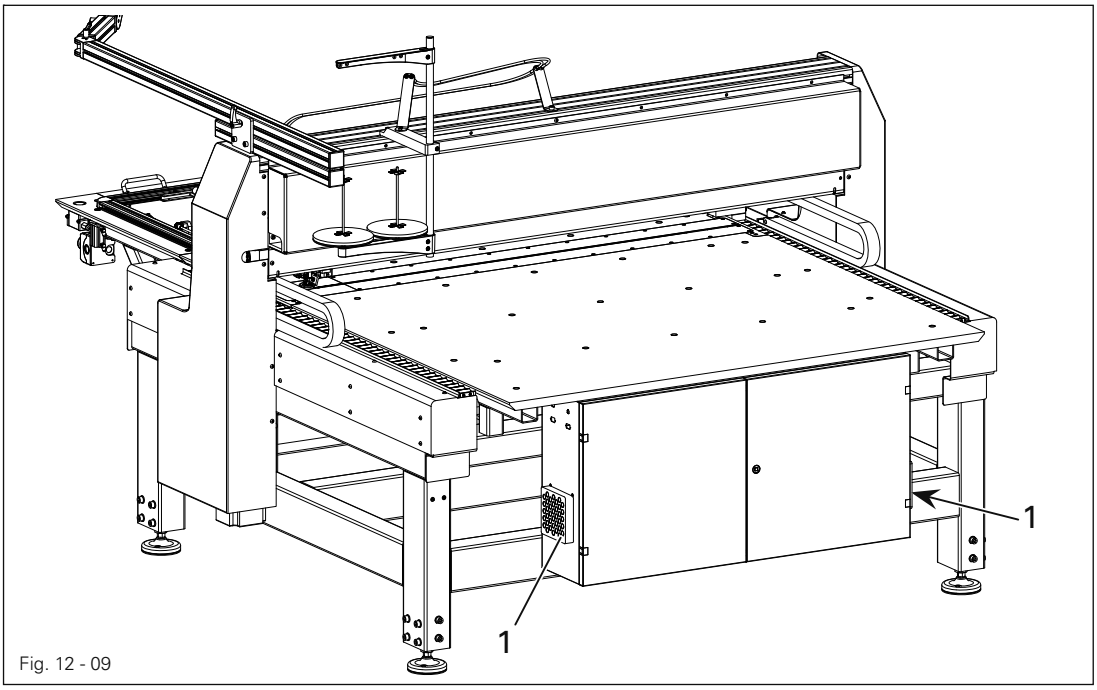

Fig. 12 - 09

- Remove cover 1.
- Remove the filter unit and blast clean with compressed air.
- Insert the clean filter unit and replace cover 1.

13 Adjustment

Before beginning any adjustment work, take note of the safety regulations found in chapter **1 Safety of this instruction manual**!

13.01 Notes on adjustment

All following adjustments are based on a fully assembled machine and may only be carried out by expert staff trained for this purpose. Machine covers, which have to be removed and replaced to carry out checks and adjustments, are not mentioned in the text. The order of the following chapters corresponds to the most logical work sequence for machines which have to be completely adjusted. If only specific individual work steps are carried out, both the preceding and following chapters must be observed. Screws, nuts indicated in brackets ( ) are fastenings for machine parts, which must be loosened before adjustment and tightened again afterwards.

Unless stated otherwise, during all adjustment work the machine must be disconnected from the electric and pneumatic power supply!
Danger of injury if the machine is started accidentally!

13.02 Tools, gauges and other accessories

- Screwdrivers with blade width from **2** to **10 mm**
- Wrenches (spanners) with jaw width from **6** to **22 mm**
- Allan keys from **1.5** to **6 mm**
- **1** universal screwdriver with interchangeable blades
- **1** metal ruler
- **1** adjustment pin (zero point adjustment), **95-771 911-15**
- **1** needle rise gauge, part no. **61-111 600-01**
- **1** adjustable clamp, part no. **08-880 137 00**
- Measuring device for the beld tension, part no.: **99-137 171-91**
- Needles

13.03 Abbreviations

TDC = top dead center
BDC = bottom dead center

13.04 Adjusting the sewing assembly

13.04.01 Balance weight

Requirement
When the needle bar is positioned at b.d.c. the largest eccentricity of the balance weight **1** should be at the top.

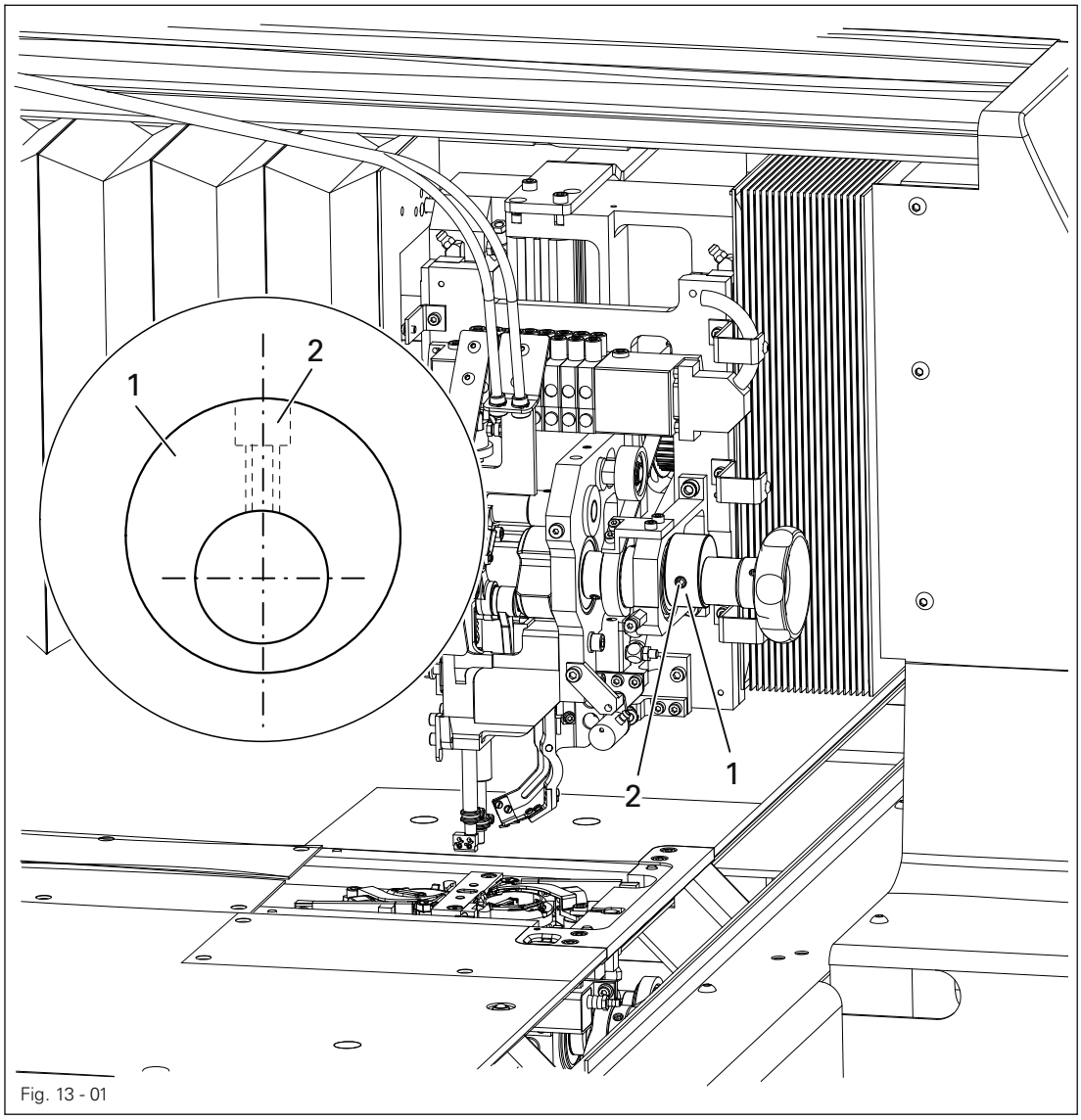

Fig. 13 - 01

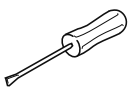

- Adjust balance weight **1** (screw **2**) in accordance with the **requirement**.

13.04.02 Needle bar in sewing direction

Requirement
A **45 mm** gap must be maintained between the front edge of the stitch platen and the needle tip.

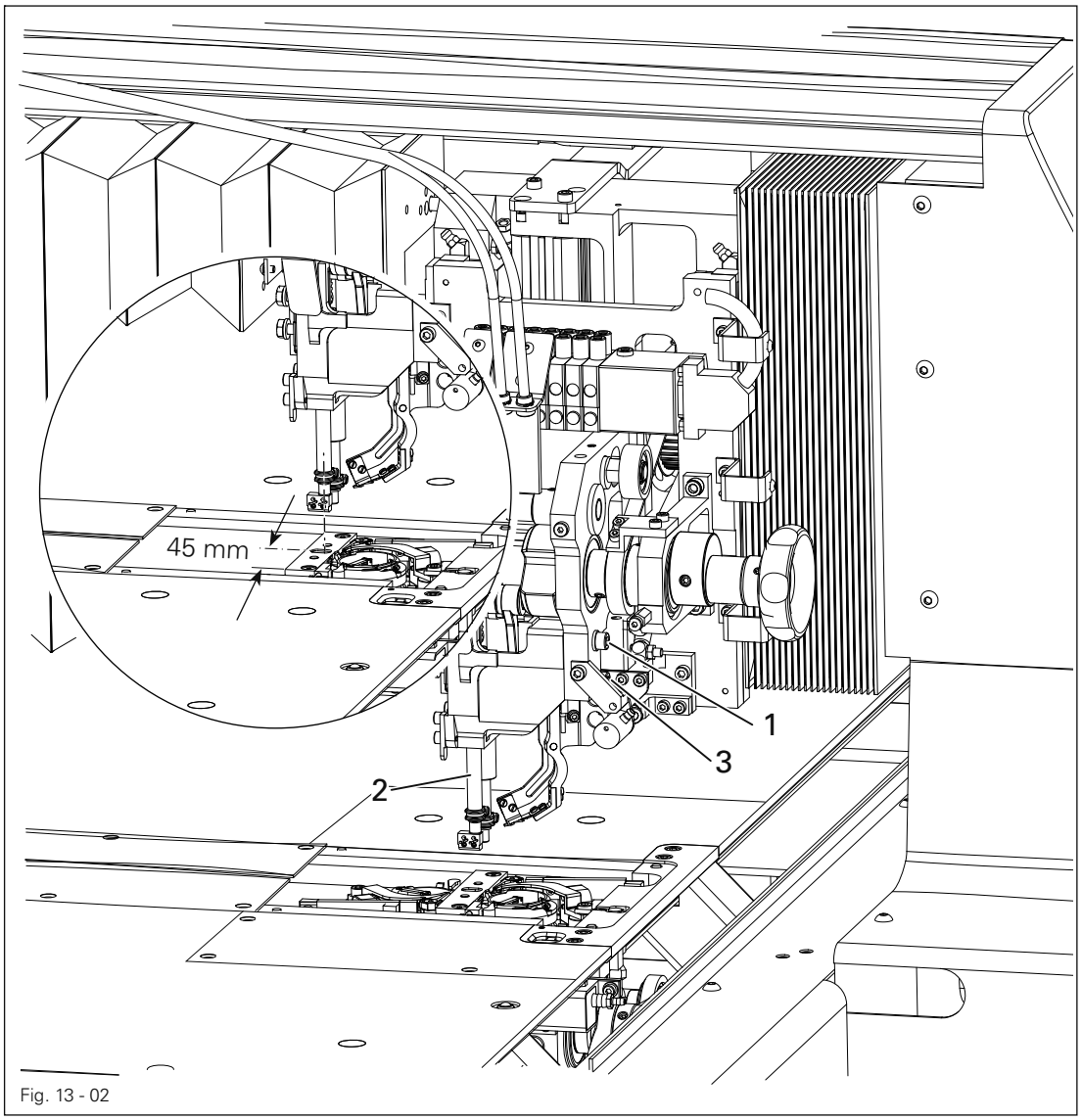

Fig. 13 - 02

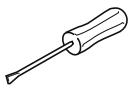

- Slightly loosen screw **1**.
- Adjust needle bar **2** (screw **3**) in accordance with the **rule**.
- Tighten screws **1** and **3**.

13.04.03 Preliminary adjustment of the needle height

Requirement
When the needle bar is positioned at t.d.c., the clearance between the needle point and the needle plate should be **25 mm**.

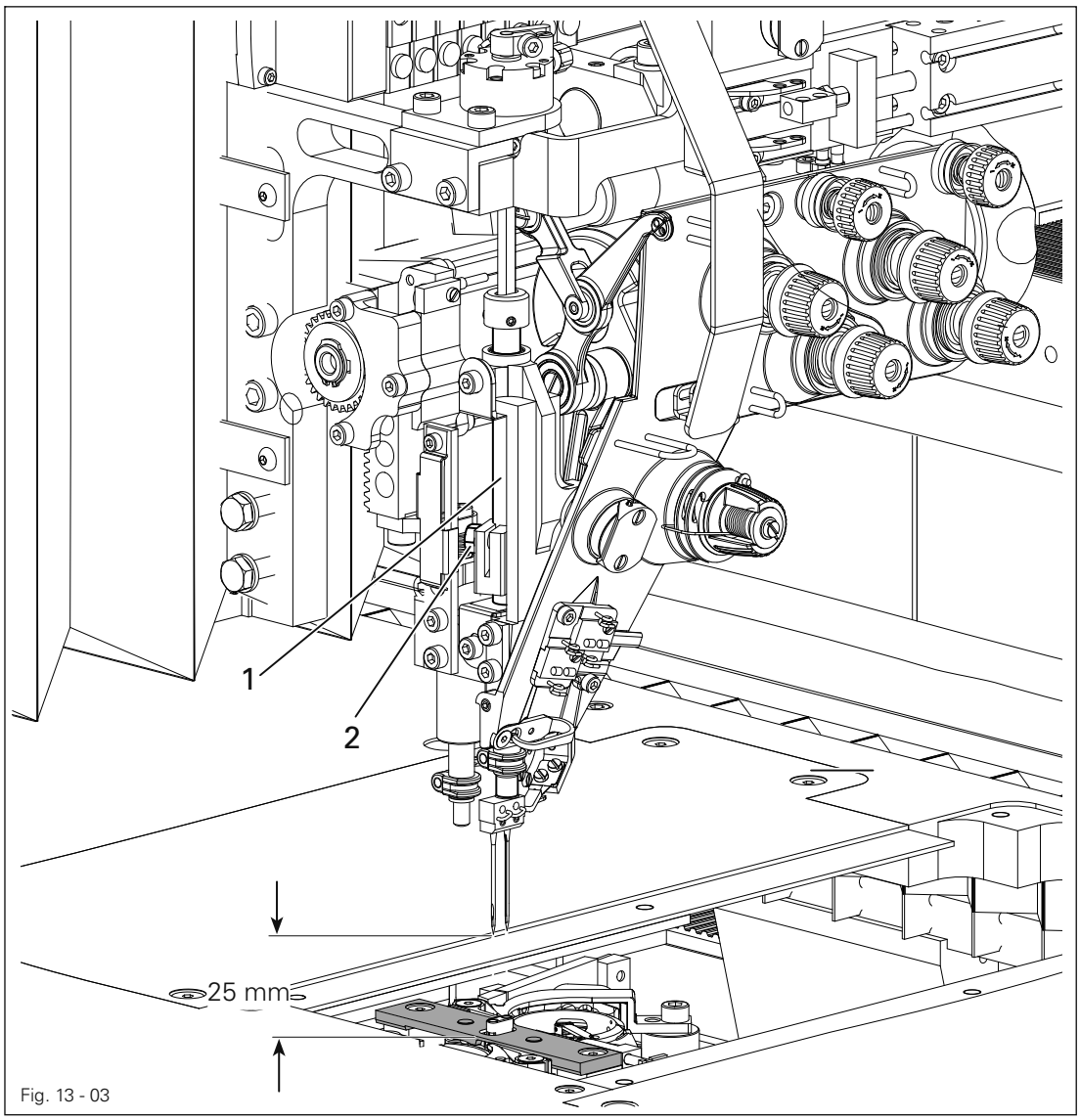

Fig. 13 - 03

- Without turning it, re-position needle bar **1** (screw **2**) in accordance with the **requirement**.

13.04.04 Needle rise, hook clearance, needle height and needle guard

Requirement

In needle rise position (**2,2** mm pased BDC):

1. the hook point **1** should be positioned at "needle centre" with a hook-to-needle clearance of **0.05** – **0.10** mm,
2. the top of the needle eye should be positioned **0.8** mm below hook point **1** and
3. the needle guard **9** should lightly touch the needle.

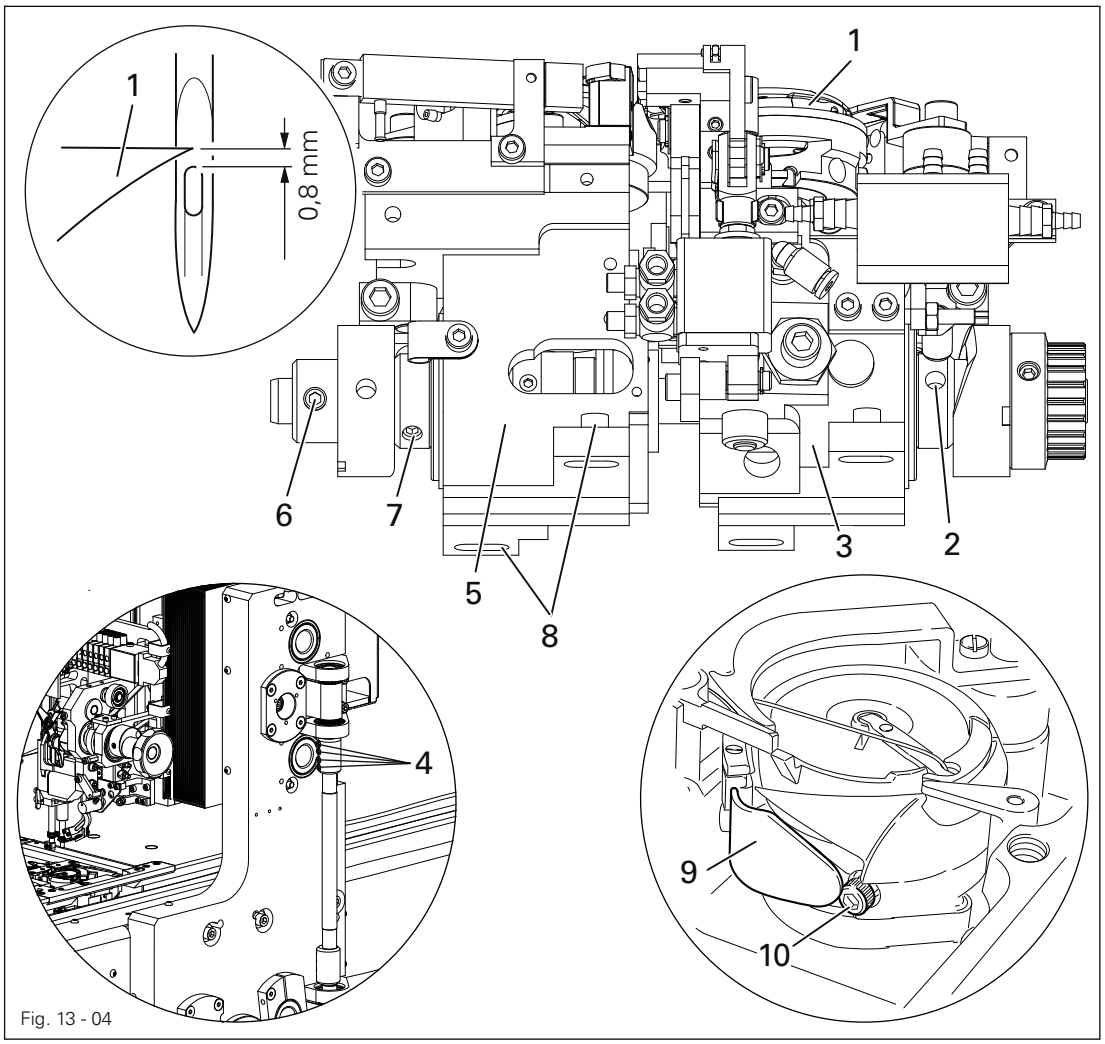

Fig. 13 - 04

- Move the needle bar in position **2.2 mm** pased BDC into place via the screw clamp (needle rise gauge) and fix the needle bar.
- Turn hook **1** (screws **2**) according to rule **1**.
- Adjust the hook bearing bracket **3** (screws **4**) according to **rule 1**.
- Adjust the hook bearing bracket **5** on the left (screws **6**, **7** and **8**) according to rule **1**.
- Move the needle bar without twisting it in accordance with **rule 2**; see also **Section 13.04.03 Preliminary Adjustment of Needle Height**.
- Adjust needle guard **9** (screw **10**) according to **rule 3**.

Once the screws **4** are loosened, the zero points must be checked as described in Section **8.05**.

13.04.05 Bobbin case opener

Requirement

1. When bobbin case opener **1** is in its far right position, the position finger **5** must be pushed back from the needle-plate cutout **6** by the thickness of the sewing thread.
2. In needle position o.T., the bobbin case opener **1** should be at its left point of reversal.

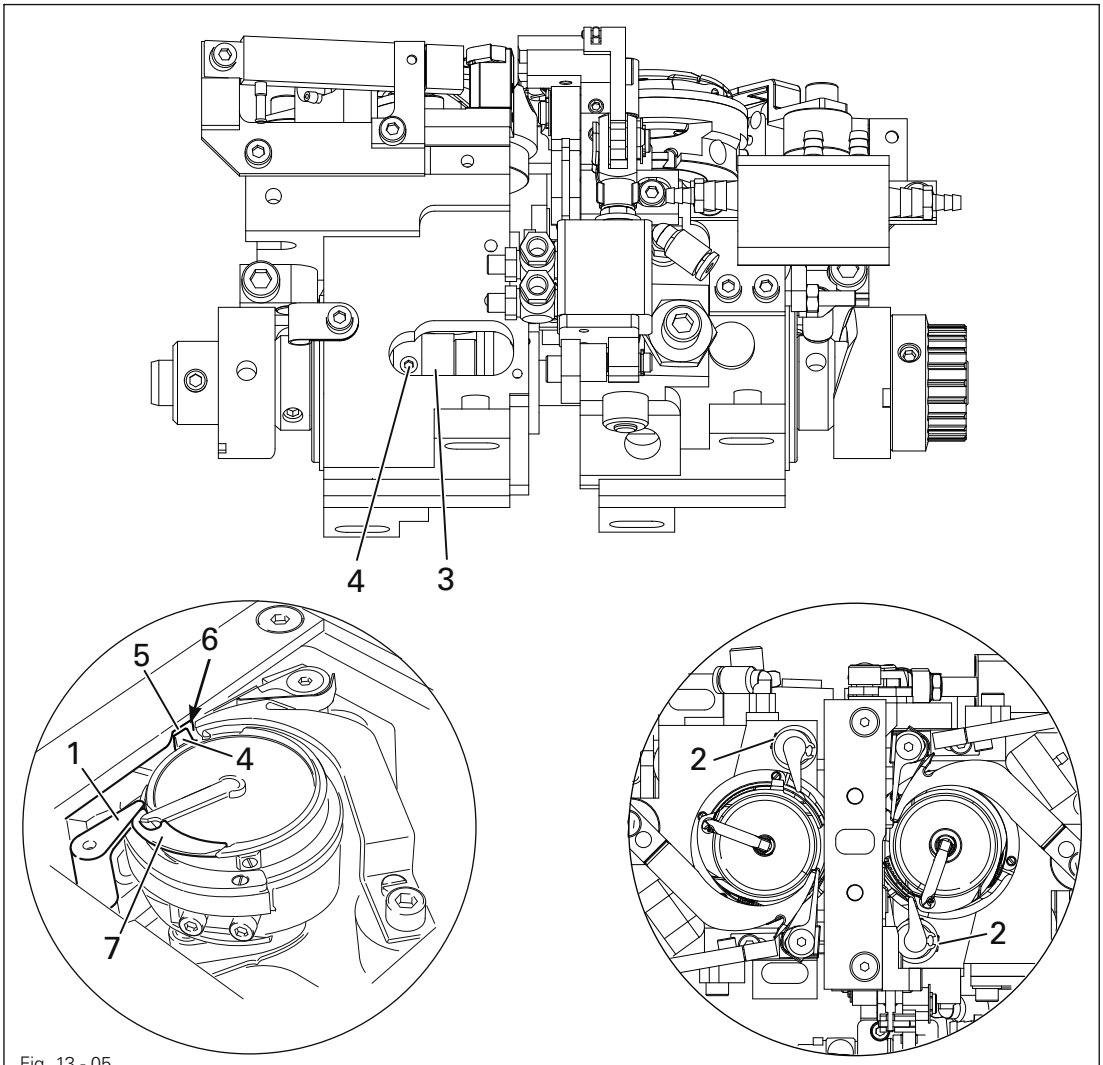

Fig. 13 - 05

- Turn bobbin case opener **1** (screw **2**) according to **rule 1**.
- Turn excenter **3** (screw **4**) according to **rule 2**.

The thread must be able to pass unhindered between bobbin case opener **1** and bobbin case **7**.

13.04.06 Counter presser

Requirement

With cylinder bar **1** extended, the

1. material presser **6** should be in position approx. **4 mm** above the upper edge of the stitch platen,
2. the material presser **6** should be positioned in that the needle is in the centre of the hole.

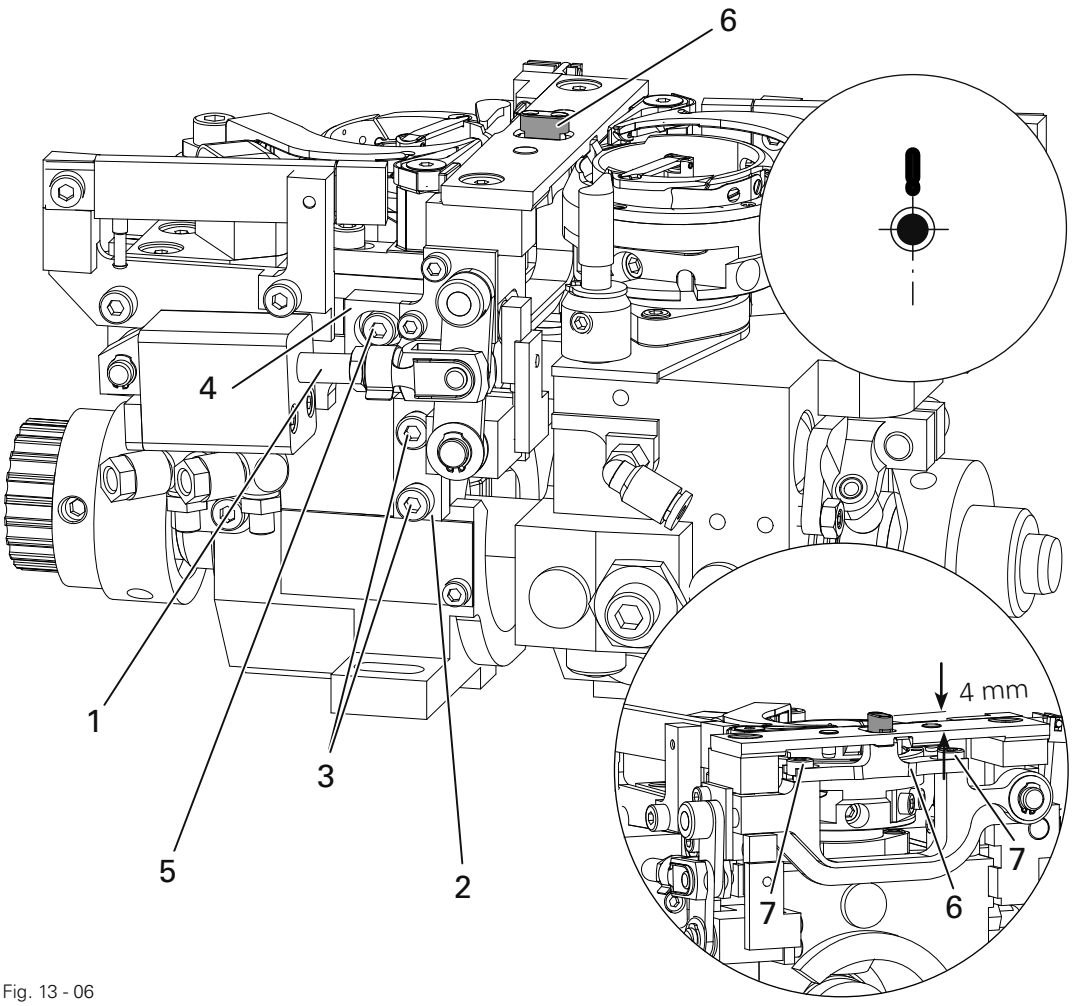

Fig. 13 - 06

- Extend cylinder bar **1**.
- Adjust carrier **2** (screws **3** on both sides) in accordance with **rule 1**.
- Adjust carrier **4** (screws **5** on both sides) and the counter presser **7** (screws **6**) in accordance with **rule 2**.

13.04.07 Bobbin thread slide

Requirement

1. With cylinder bar **3** extended, the lever **4** must have a distance of **0**,**2**mm to the edge of the needle-plate
2. The bobbin thread slide **7** must move parallel to the surface of the needle-plate.

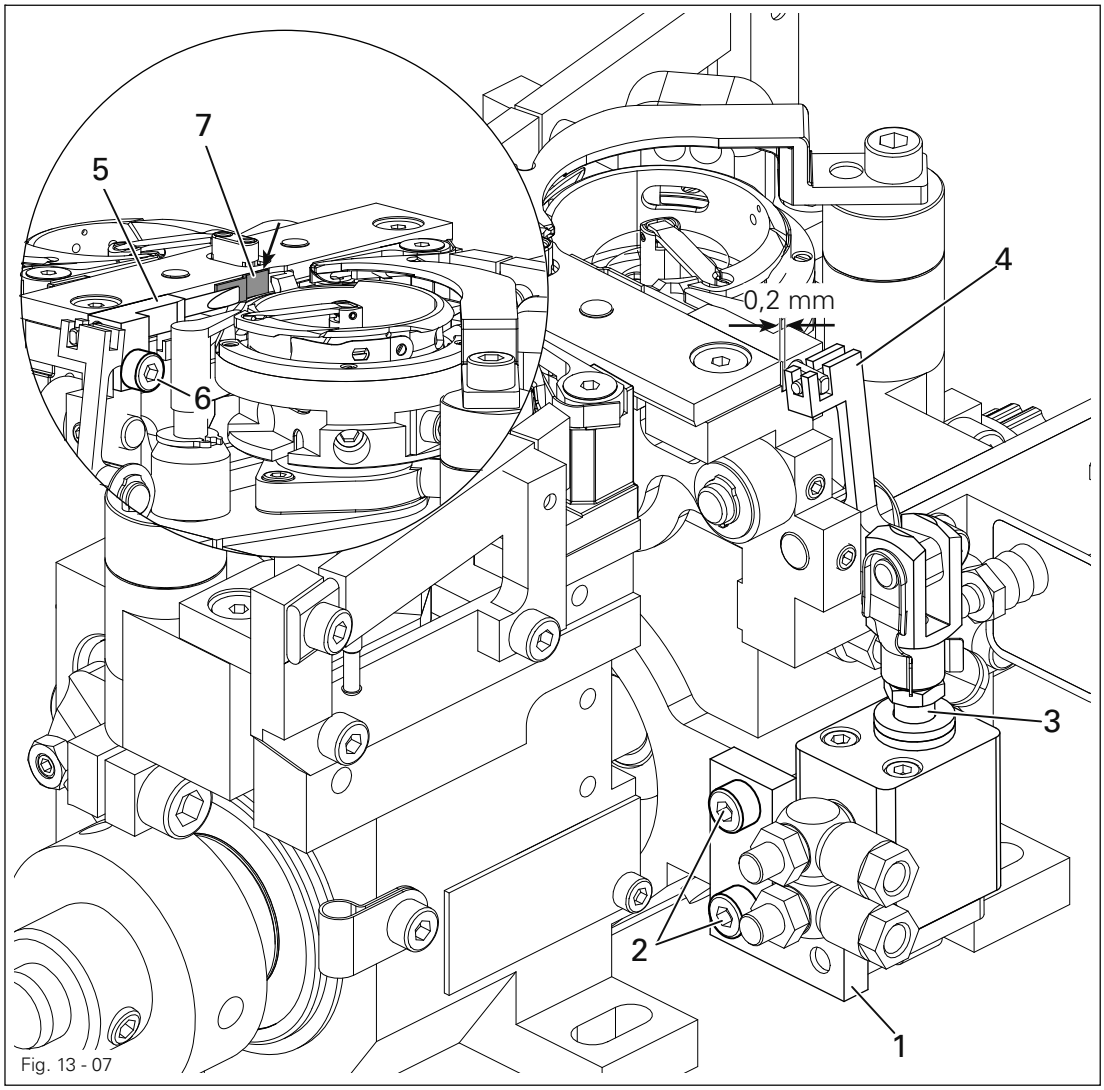

Fig. 13 - 07

- Adjust carrier **1** (screws **2**) in accordance with **rule 1**
- Turn guide **5** (screw **6**) according to **rule 2**.

13.04.08 Neele turning device

Requirement
Between stop **1** and stud **3** must be a distance of **5**mm

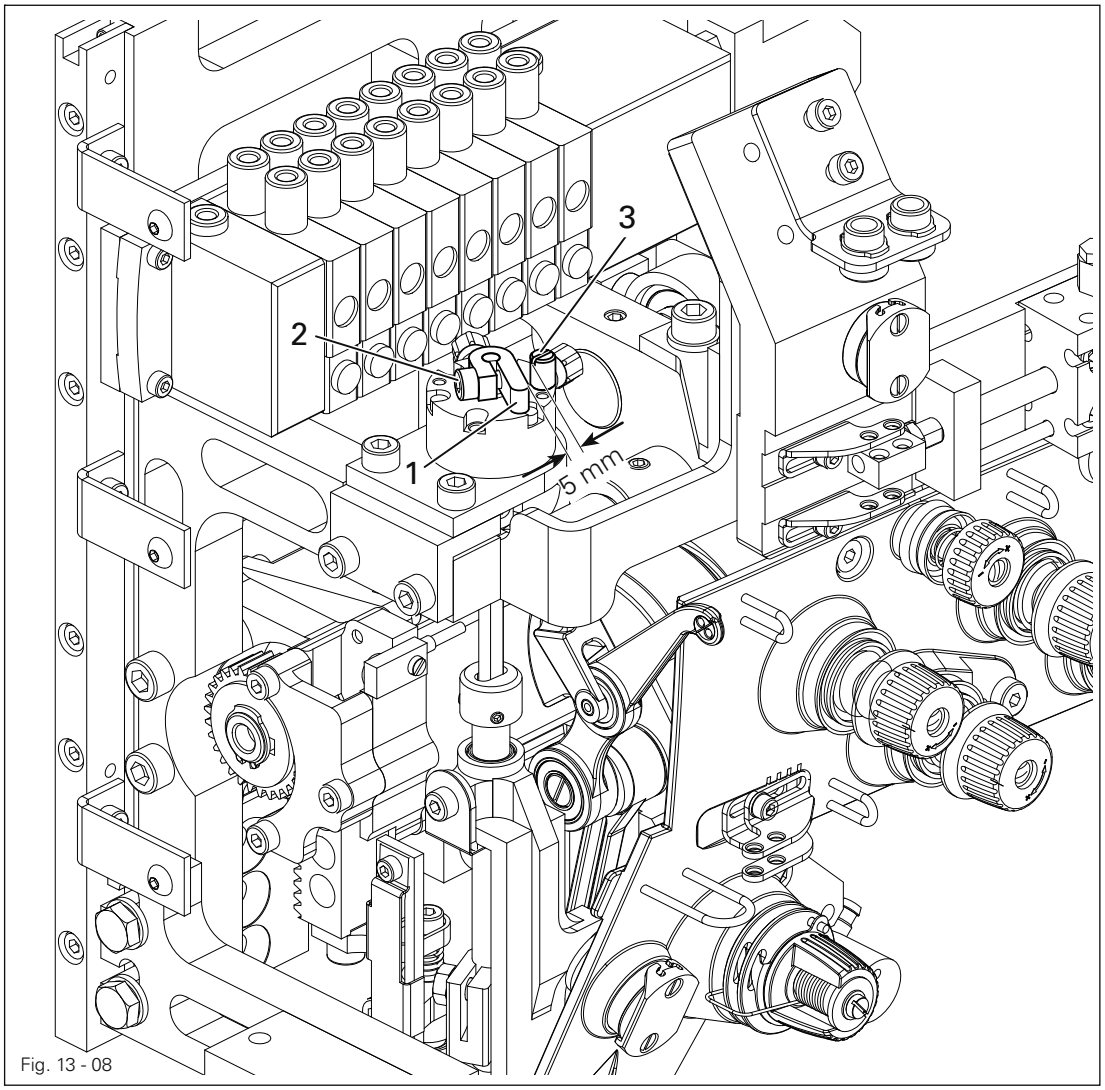

Fig. 13 - 08

- Adjust stop**1** ((screws **2**) in accordance with **rule**.

If you have, with closed forms (e.g. circles) hitch stitches, it is possible to change the setting.

13.04.09 Re-engaging the slip-clutch

Clutch **1** is adjusted at the works. In the case of a thread jamming, clutch **1** will disengage, in order to avoid damage to the hook.
The following describes how to re-engage clutch **1**.

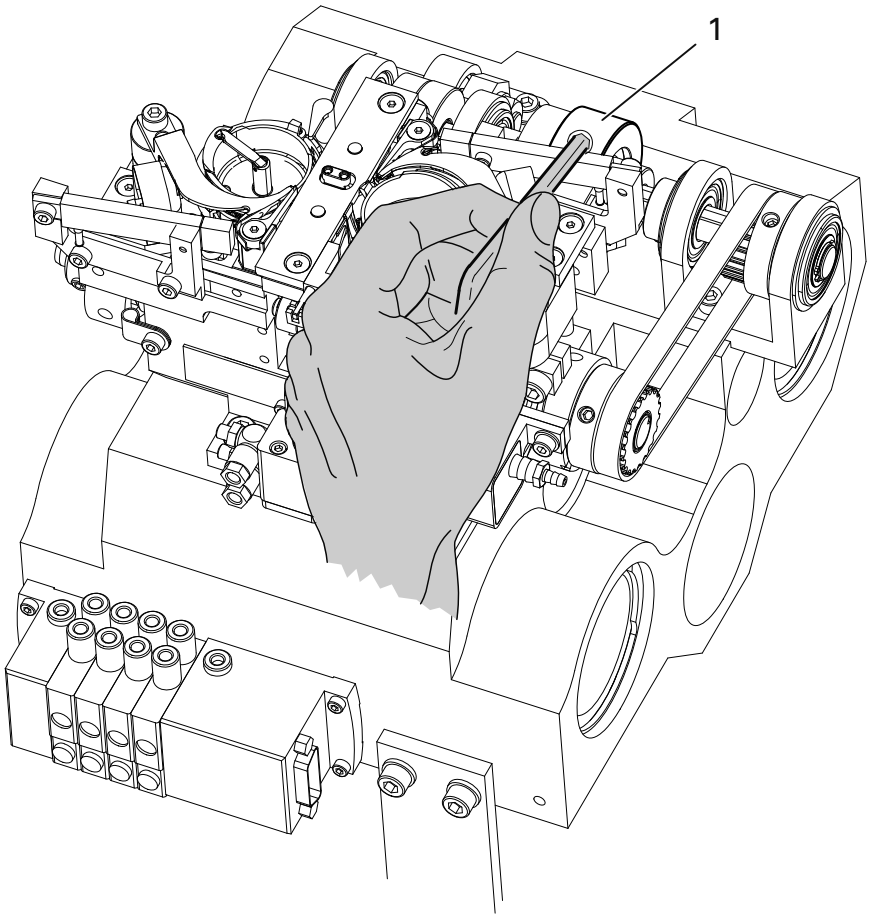

Fig. 13 - 09

- Remedy jammed thread fault.
- Hold clutch **1** firmly, as shown in Fig. **13 - 09**, and turn the balance wheel until clutch **1** re-engages.

13.05 Adjusting the thread trimmer

13.05.01 Resting position of roller lever/radial position of control cam

Requirement

1. When the take-up lever is at t.d.c., control cam **1** should just have moved roller lever **5** into its basic position.
2. When the thread trimmer is in its resting position, there should be a clearance of **0.1 mm** between roller lever **5** and control cam **1**.

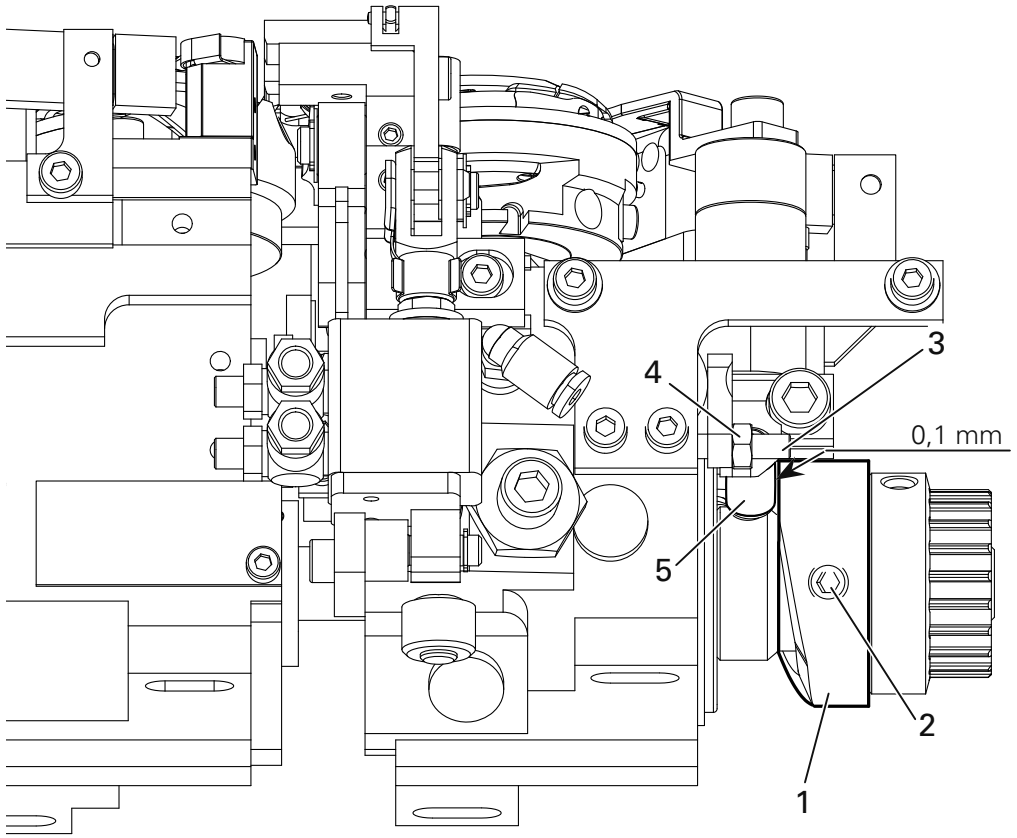

Fig. 13 -10

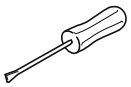

- Adjust control cam **1** (screws **2**) in accordance with **requirement 1**.
- Adjust screw **3** (nut **4**) in accordance with **requirement 2**.

13.05.02 Position and height of the thread catcher

Requirement
When the needle bar is positioned at b.d.c., the edges of thread catcher **3** and knife **5** should be flush (see arrow).

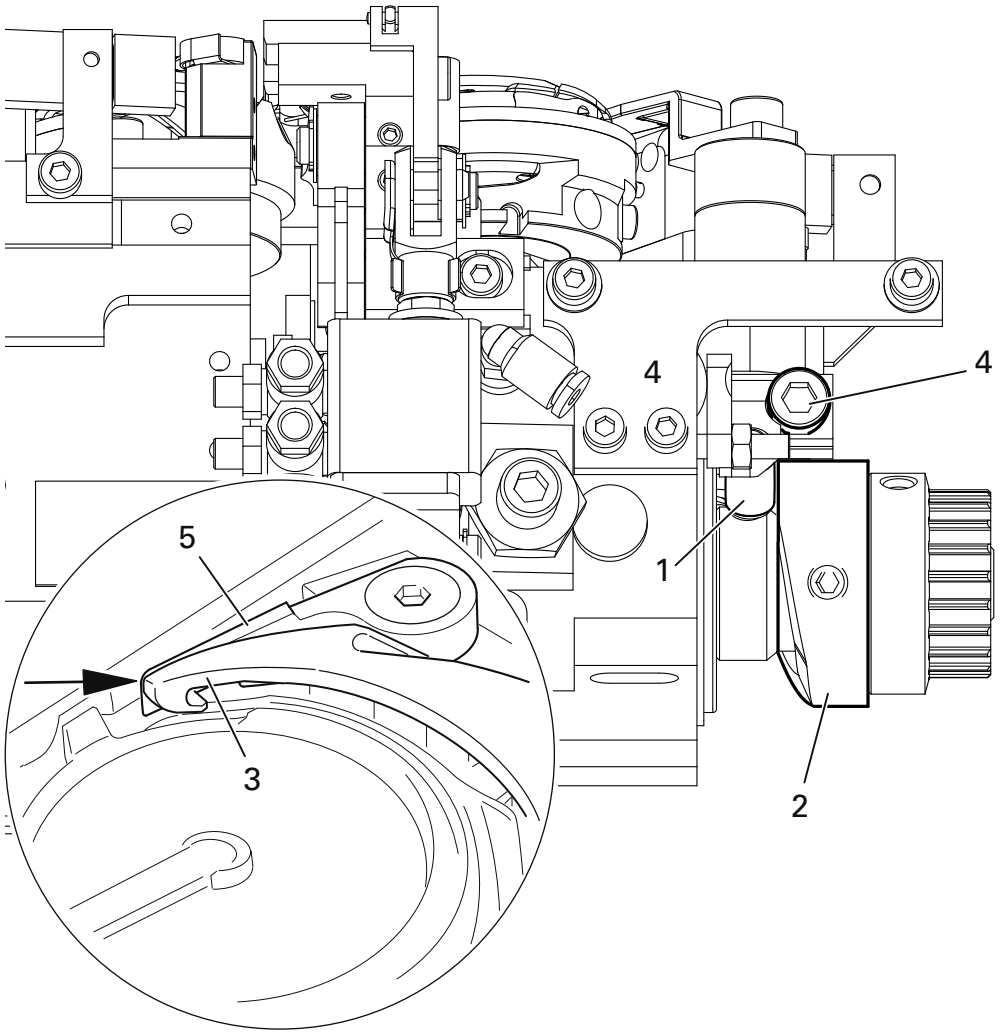

Fig. 13 - 11

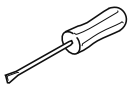

- Press roller lever **1** against control cam **2**.
- Adjust thread catcher **3** (screw **4**) in accordance with the **requirement**

The height of thread catcher **3** is pre-set by the manufacturer and, if necessary, it can be adjusted with washers under thread catcher **3** on the base of the hook bearing.

13.05.03 Knife pressure

Requirement
When the front edge of thread catcher **3** is **5 – 6 mm** in front of the knife blade, the knife **4** should be touching the catcher edge with slight pressure.

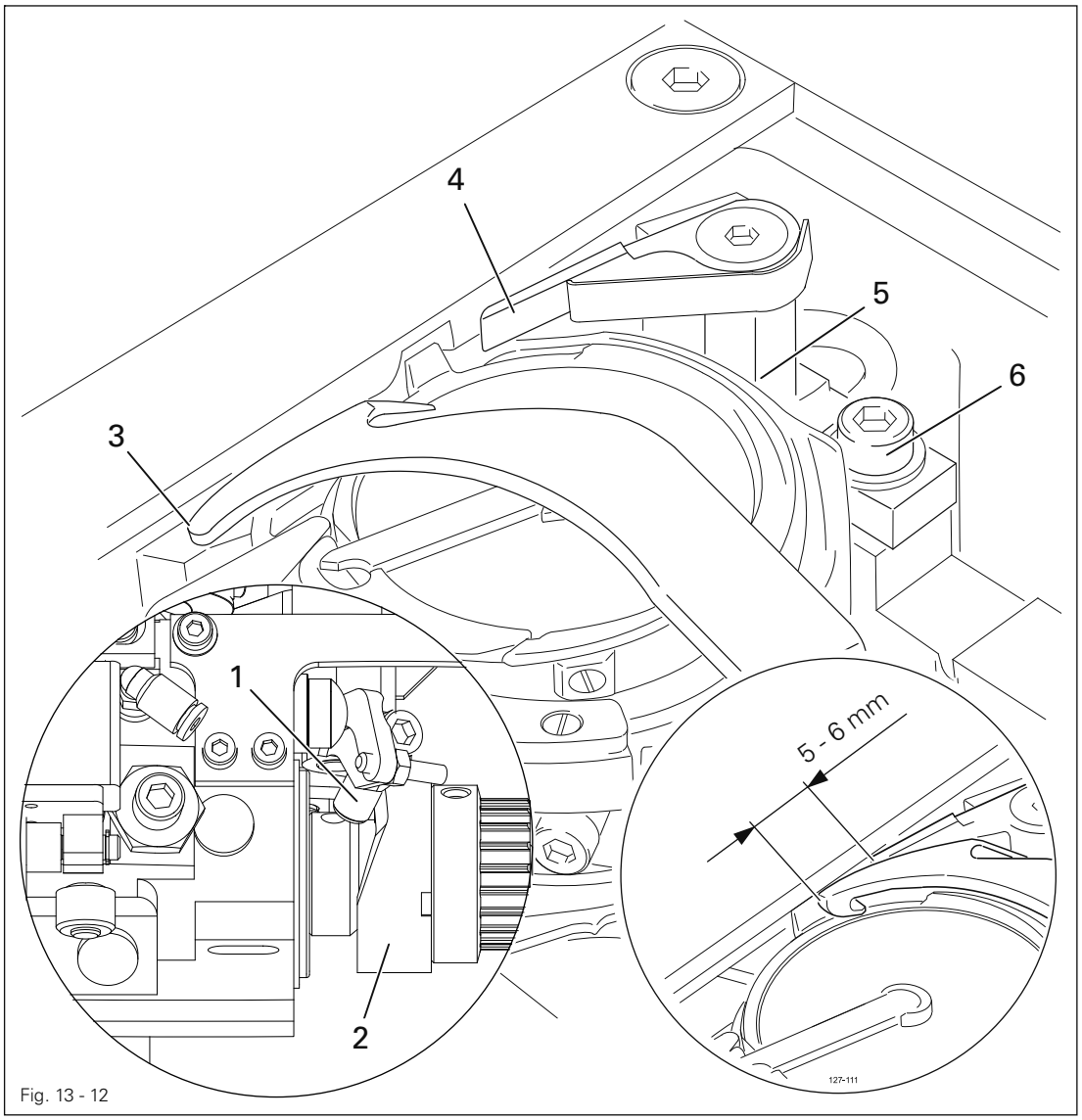

Fig. 13 - 12

- Bring the take-up lever to its b.d.c and press roller lever **1** into the control cam **2**.
- Turn the balance wheel until the front edge of catcher **3** is at a distance of **5 – 6 mm** from the blade of knife **4**.
- Swing knife bearing **5** (screw **6**) in accordance with the **requirement**.

After completing the adjustment, recheck the position of the thread catcher in accordance with Chapter **13.05.02 Position and height of the thread catcher**.

13.05.04 Bobbin thread clamp spring

Requirement
When the thread trimmer is in its cutting position, the clamp spring should slightly touch the thread catcher and hold the thread reliably.

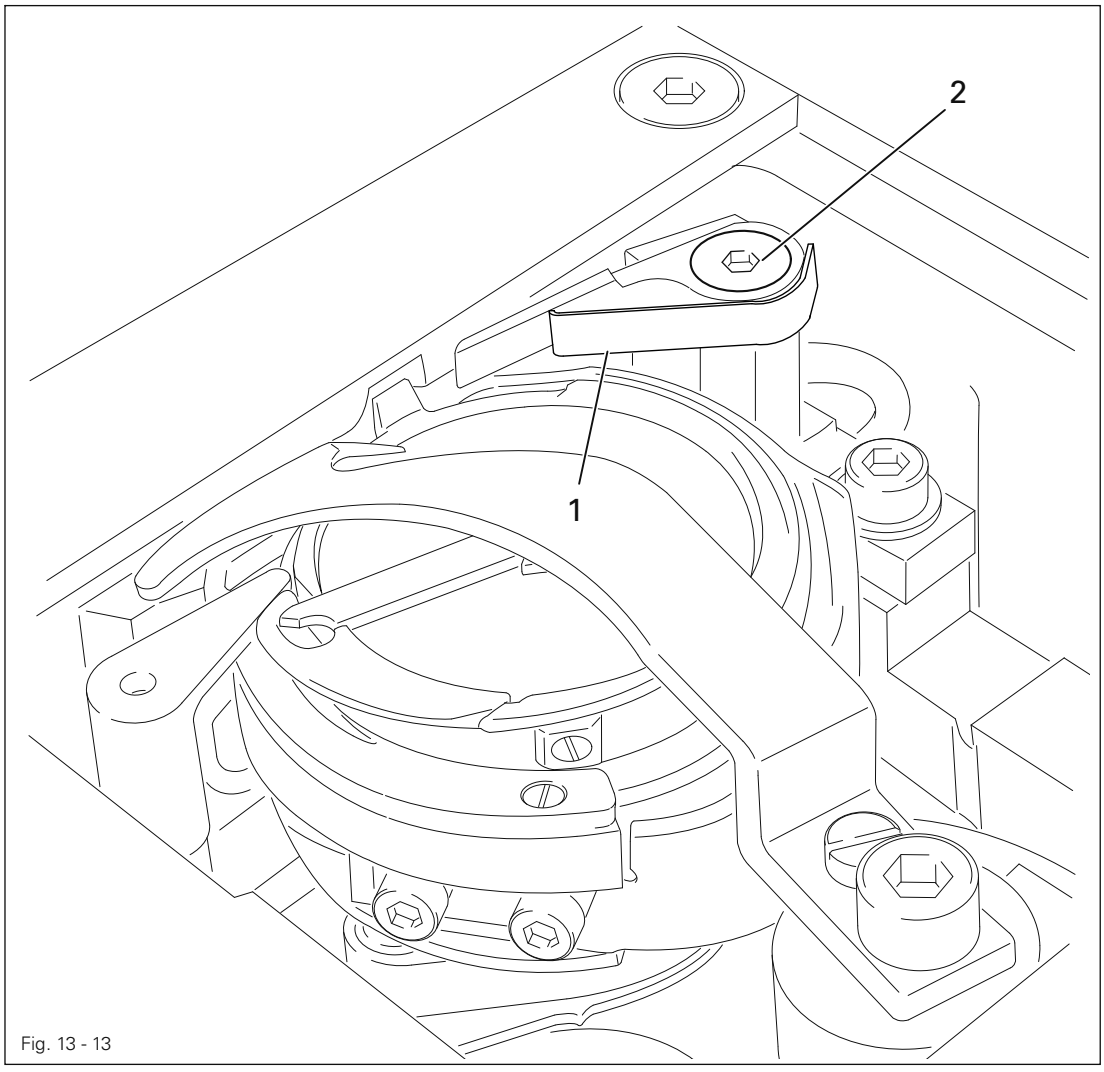

Fig. 13 - 13

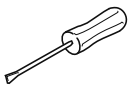

- Adjust clamp spring **1** (screw **2**) in accordance with the **requirement**.
- Carry out the cutting operation by hand and check the setting. Readjust if necessary.

13.05.05 Manual cutting test

Requirement

1. When moving forward, thread catcher **1** must not move bobbin thread **3**.
2. When thread catcher **1** is at its front point of reversal, bobbin thread **3** should be in the centre of the marked area (see arrow).
3. After the cutting operation has been completed, needle and bobbin thread should be cut neatly and bobbin thread **3** held.

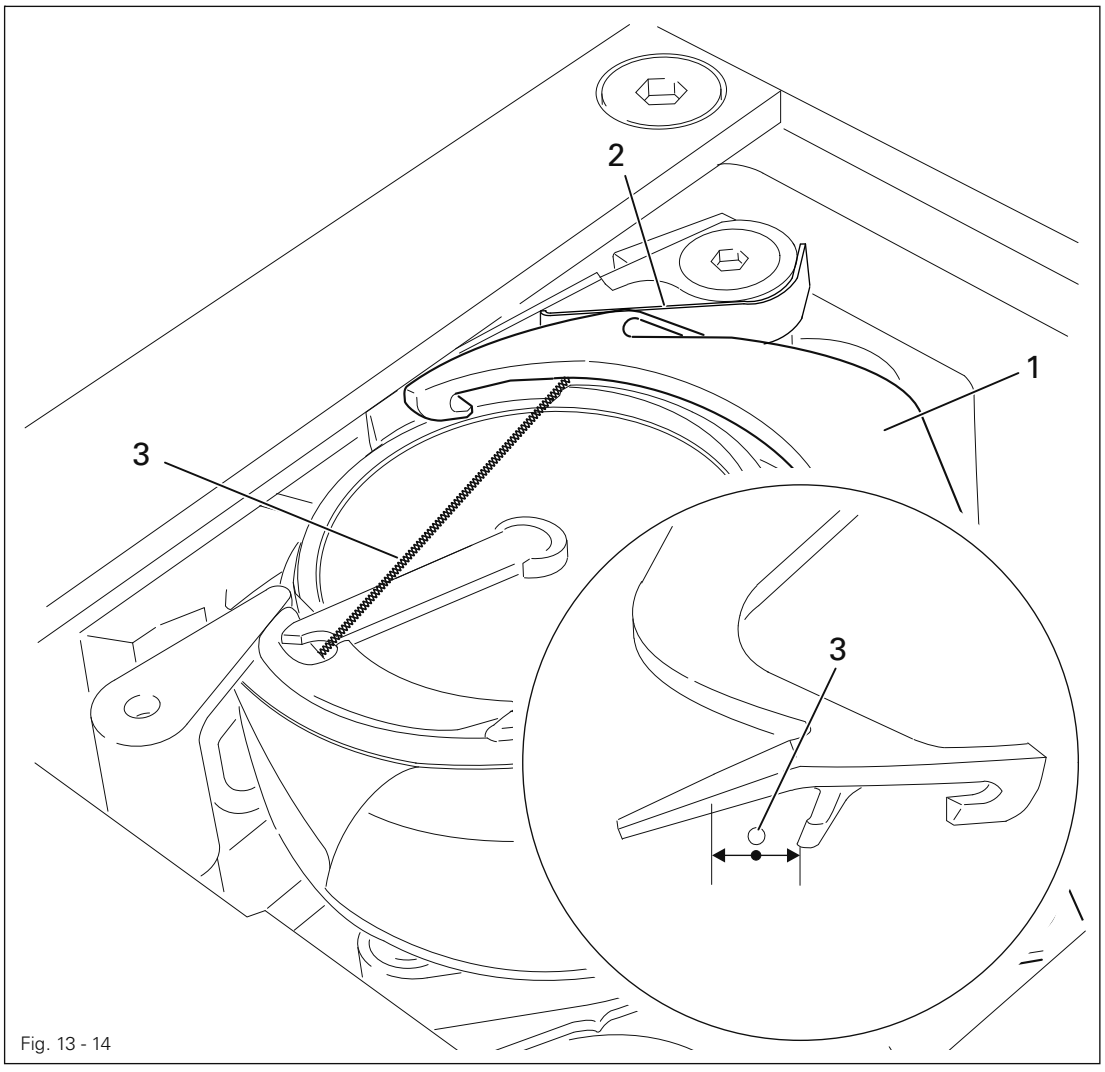

Fig. 13 - 14

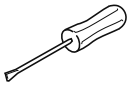

- Sew a few stitches.
- Switch off the main switch and the compressed air.
- Carry out a manual cutting test.
- Check **requirement 1**. If necessary, readjust thread catcher **1** in accordance with Chapter **13.05.02 Position and height of the thread catcher**.
- Check **requirement 3**. If necessary, readjust bobbin thread clamp spring **2** in accordance with Chapter **13.05.04 Bobbin thread clamp spring**.

13.06 Adjusting the template drive

13.06.01 Y drive initiator

Requirement
Initiator **1** should be positioned at a distance of **0.2 mm** to the contact surface.

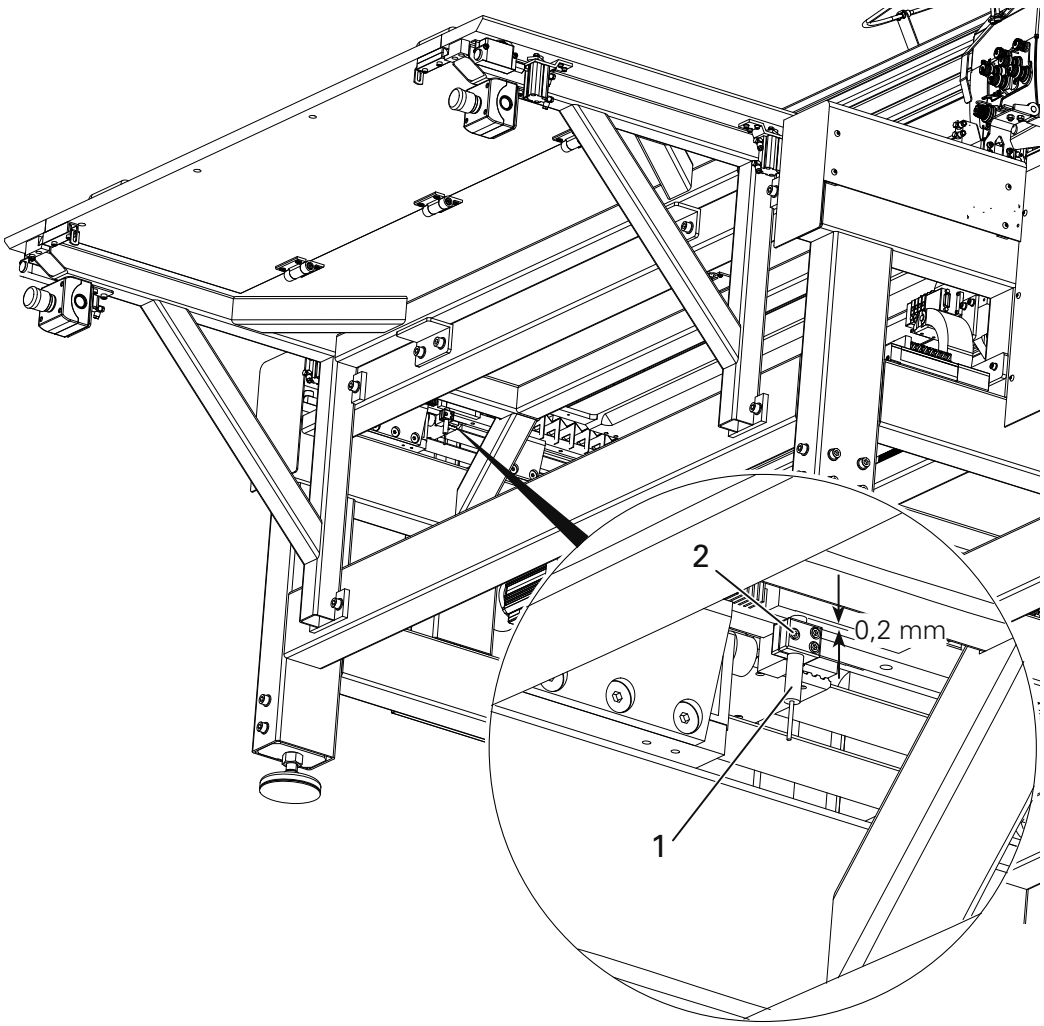

Fig. 13 - 15

- Adjust the initiator **1** (screws **2**) in accordance with the **rule**.

13.06.02 X drive initiator

Requirement
Initiator **1** should be positioned at a distance of **0.2 mm** to the contact surface.

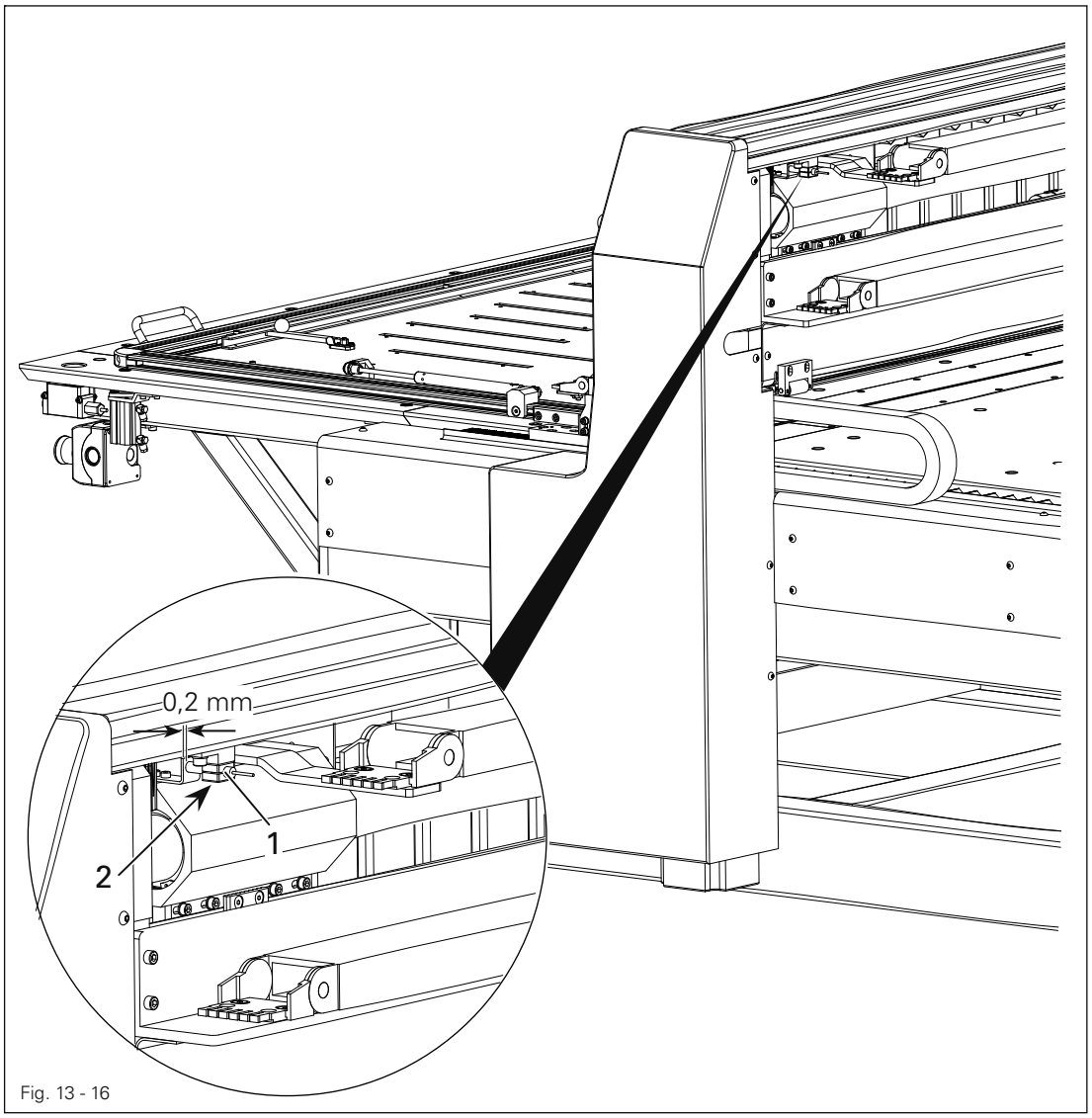

Fig. 13 - 16

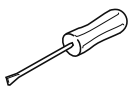

- Adjust the initiator **1** (screws **2**) in accordance with the **rule**.

13.06.03 Adjusting the belt tensions

Requirement
The belt tensions should be tested and adjusted with measuring device **5**.
The belt tensions of the jig drive should be tested with a reading of **1100** Nm (belt width **50 mm**).

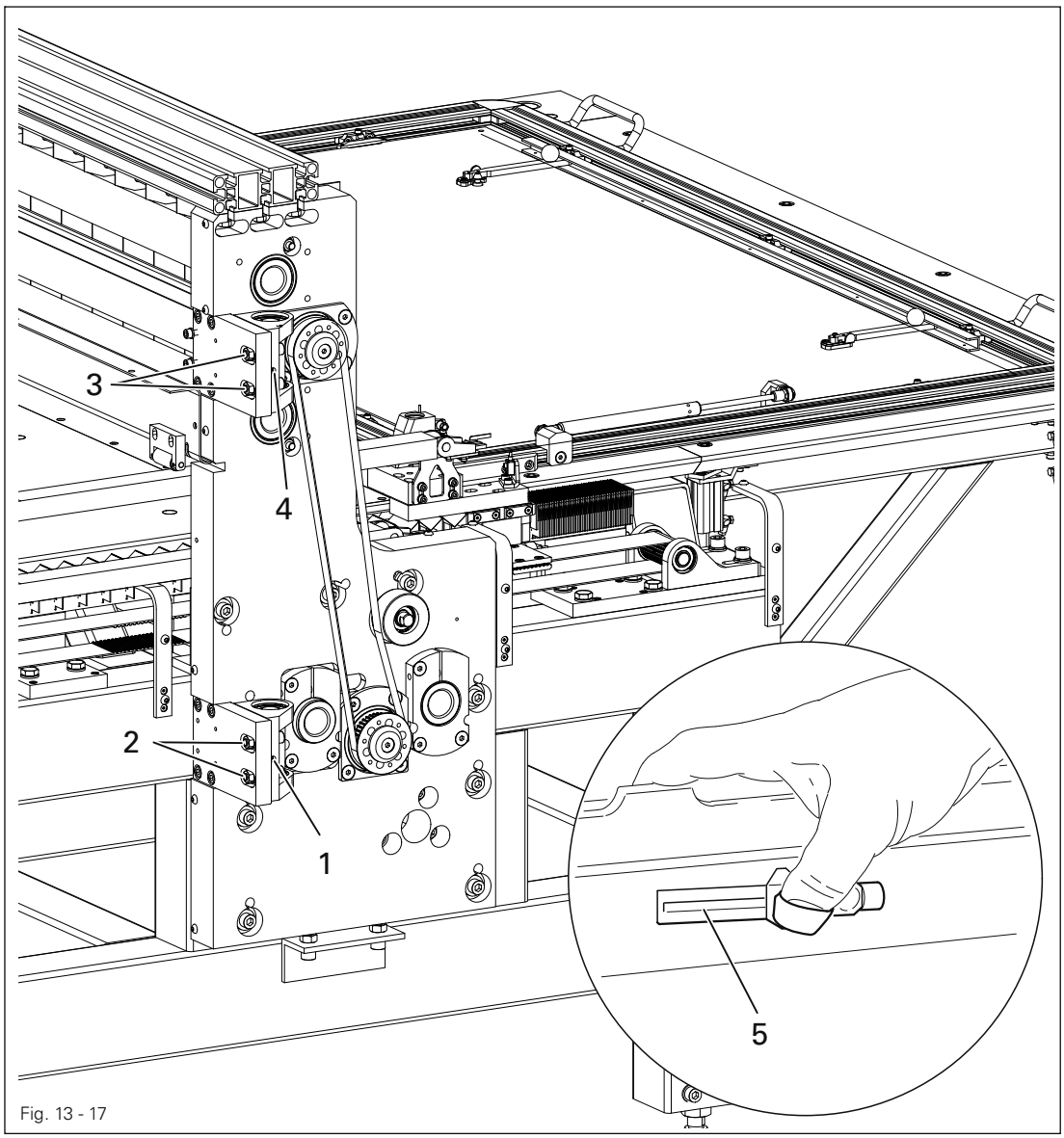

Fig. 13 - 17

- Adjust belt tension of the lower belt with screws **1** (screws **2**) in accordance with the **requirement**.
- Adjust belt tension of the upper belt with screws **3** (screws **4**) in accordance with the **requirement**.

Information about the correct use of measuring device **5** can be found in the enclosed instructions for measuring device **5**.

13.06.04 Jig drive reference points

Requirement
With the "reference points" function the jig drive should move exactly to all reference points.

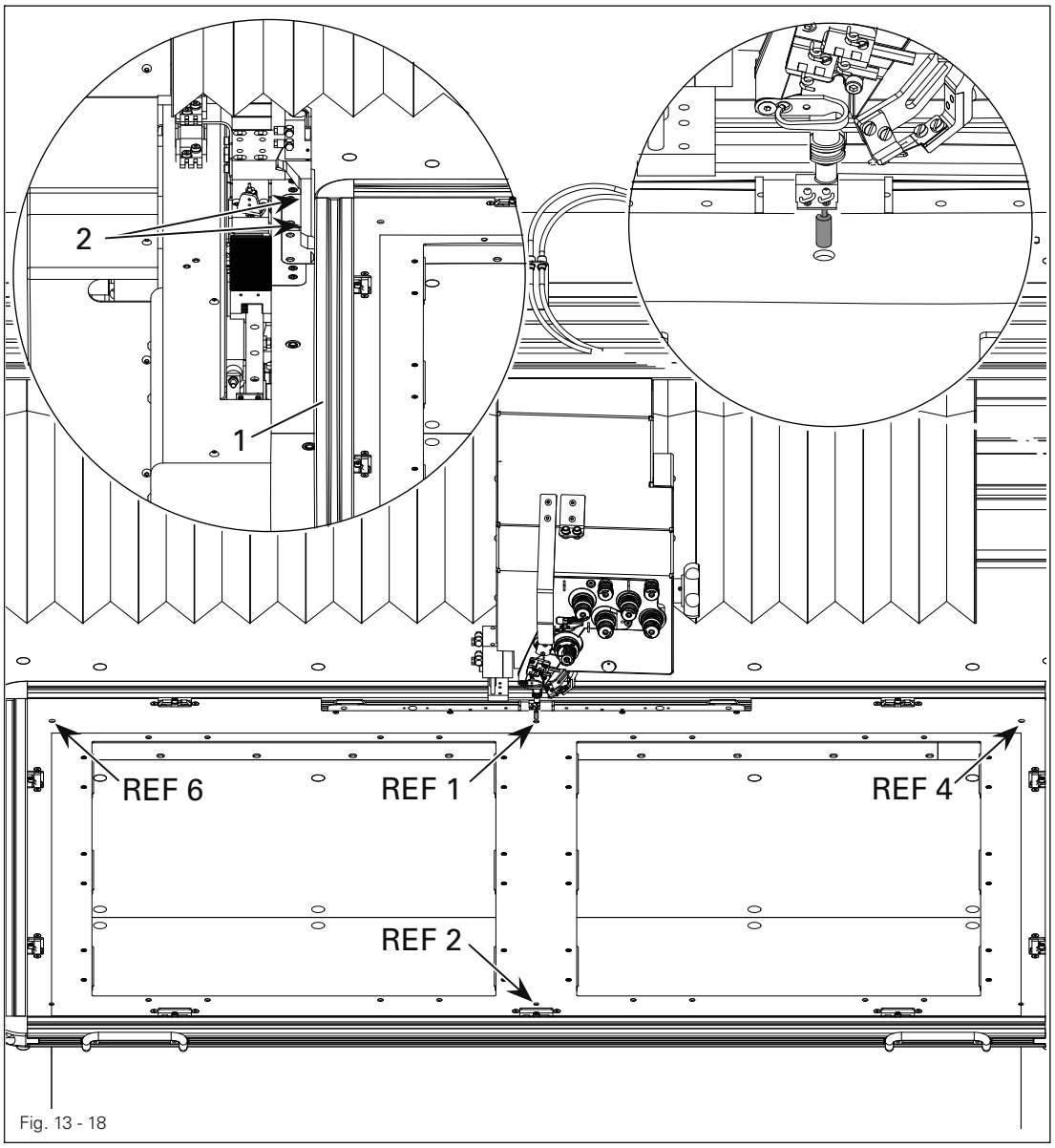

Fig. 13 - 18

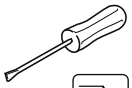

- Switch on the machine.

- Call up the input menu.

TEST

- Call up function "Test template drive" from the service function menu.

Enter

- Insert jig and press Enter.

- Move to first reference point (**REF 1**).

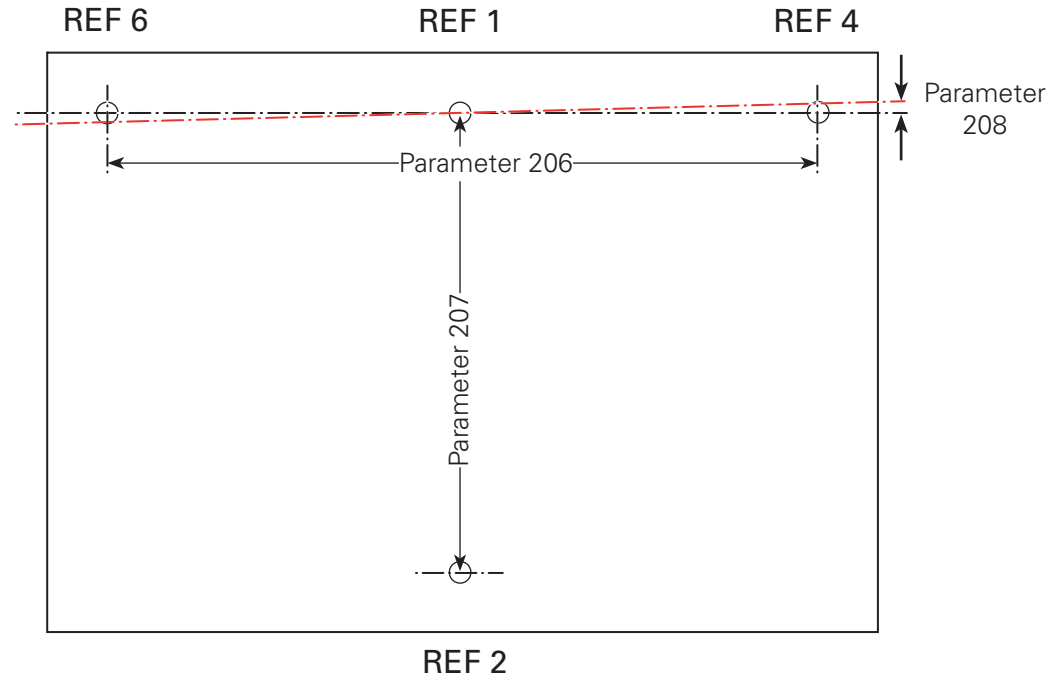

Fig. 13 - 18a

- Move to second reference point (**REF 2**).
  Adjust the frame **1** (screws **2** on both sides) in case of lateral deviations from the reference point.
- Re-check reference point **1** and repeat zero point setting as needed (see **Section 8.05**).
- Check each of the reference points one by one.

Setting at length deviation from **REF 1** to **REF 2**:

- Adjust zero points as explained in **chapter 8.05 Check/ set zero points**.
- Carry out increment correction via parameter "**207**" according to the **requirement**.

Setting at length deviation from **REF 4** to **REF 6**:

- Carry out increment correction via parameter "**206**" according to the **requirement**.

Setting the parallelism from **REF 4** to **REF 6** (see Fig. 13 - 18a):

- Correction via parameter "**208**" according to the **requirement**.

After increment correction, the zero points must be checked and adjusted as needed; see **Section 8.05 Check/adjust zero points**.

13.07 Service menu

The status of the digital inputs is displayed in the service menu. The outputs can be set or reset manually. In addition it is also possible to call up functions for carrying out a cold start, for loading the operating program and for setting the control panel.

- Switch on the machine.

- Call up the input mode.

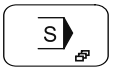

- Call up the service menu.

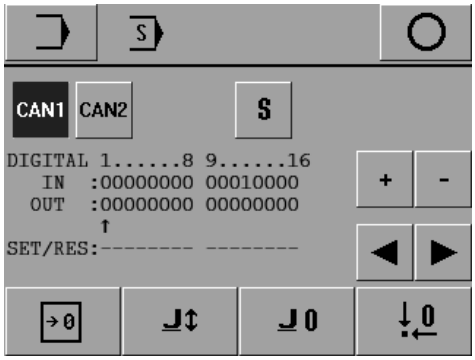

Explanation of the functions

Input mode
This function is used to change to the initial state of the input mode.

Conclude input
This function is used to conclude the input and change into the sewing mode.

Can-nodes
This function is used to select the required Can-node. The currently selected Can-node is shown as an inverse symbol.

Special outputs
This function is used to set or reset special outputs.

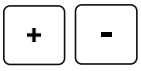

Plus/minus keys
These are used to set (+) or reset (-) the selected output.

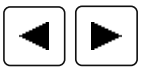

Arrow keys
These are used to select the desired outputs.

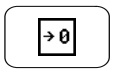

Cold start
This function is used to carry out a cold start, see Chapter **13.07.01 Cold start**.

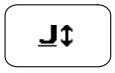

Moving/ calibrating the vibrating pressur foot
This function calls up a menu for setting the vibrating pressur foot height and the vibrating pressur foot stroke.

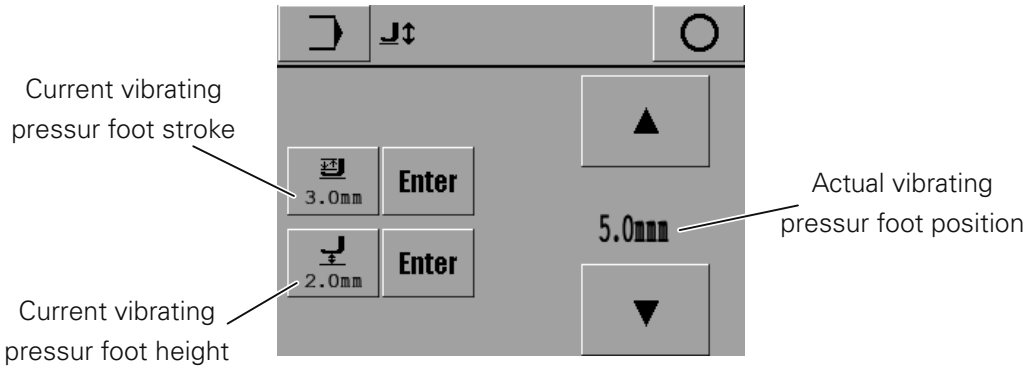

Setting the vibrating pressur foot stroke

- Push button. The vibrating pressur foot travels to the position "lower height + stroke" (as shown in the example 2 + 3)

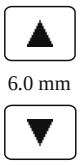

- Travel to the desired stroke (e.g. 4 mm + + height) by pushing the relevant button.

- Apply the adjusted position minus lower height.

Setting the vibrating pressur foot height

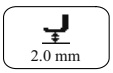

- Push button. The vibrating pressur foot travels to the position "lower height" (as shown in example 2)

- Travel to the desired height (e.g. 3 mm) by pushing the relevant button.

- Apply adjusted position.

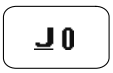

Vibrating pressur foot zero points
This function allows the checking/ adjustment of the vibrating pressur foot zero points (see Section 8.06).

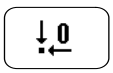

Calibrating the carriage zero points
This function calls up a menu for setting the zero points (see Sec. 8.05 "Check/ set zero points").

13.07.01 Cold start

When a cold start is carried out, all newly created or altered programs, as well as all altered parameter settings are deleted!
The machine memory is deleted or set back to the status at the time of delivery.

- Switch on the machine and call up the input mode.
- Call up the service menu.
- Call up the cold start function.

- Confirm that a cold start is to be carried out.

Explanation of further functions

Input mode
This function is used to change to the initial state of the input mode.

Service menu
This function is used to return to the service menu, see Chapter **13.23 Service menu**.

Conclude input
This function is used to conclude the input and change into the sewing mode.

Esc
The input is interrupted.

13.07.02 Loading / updating the operating program

To boot a new machine software, a sd-card with the needed files has to be plugged in the sd-slot of the control panel.

- Switch on the machine and push the button "FORCE UPDATE".

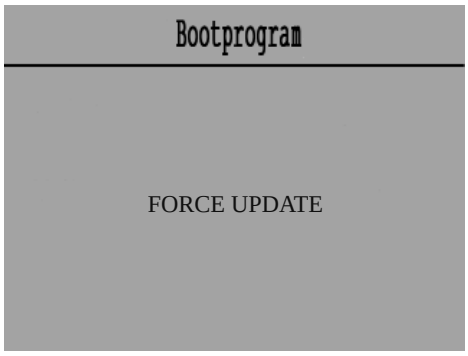

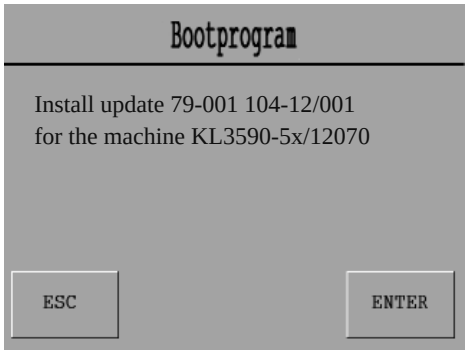

- Start the bootsequence with the key "ENTER".

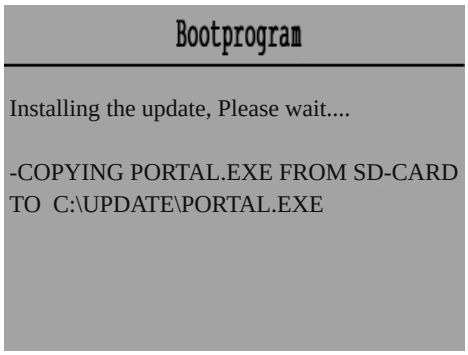

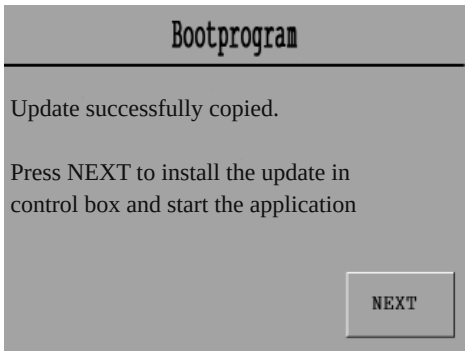

- To install the software, push the key "NEXT".

13.08 Sewing motor adjustments

- Switch on the machine.

- Call up the input mode.

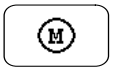

- Call up menu for testing and setting of the sewing motor..

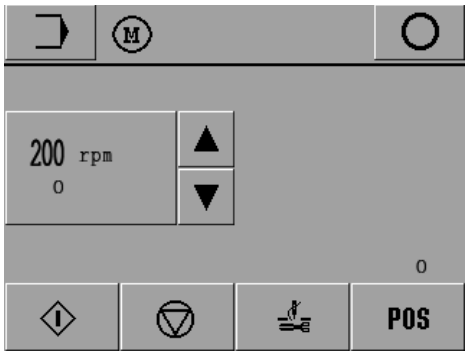

Explanation of the functions

Conclude input
This function is used to conclude the input and change into the sewing mode.

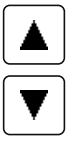

Speed adjustment
This function is used to increase or reduce the set speed.

Sewing motor start
This function is used to start the sewing motor with the set speed.

Sewing motor stop
This function is used to stop the sewing motor again.

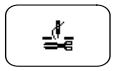

Thread trimming cycle
This function is used to run the thread trimming cycle.

Needle function
The current actual position of the needle is displayed.
To set the t.d.c. position of the needle bar, bring the needle bar to the appropriate position by turning the balance wheel and take over this position by operating the "POS" key.

13.09 Parameter settings

All parameters which can be altered are shown in the list of parameters (Chapter 13.09.02). A description of how to select parameters and alter the values is given below.

13.09.01 Selecting and altering parameters.

- Switch on the machine and call up the input mode.

- Call up the parameter input function.

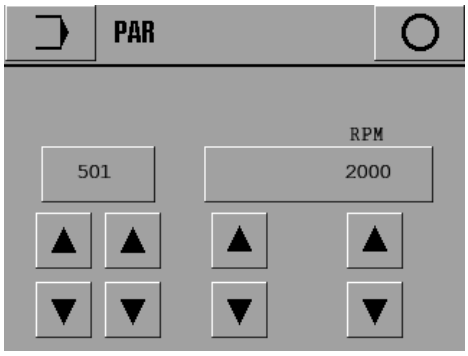

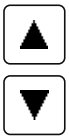

- Select the parameter separately by group (hundred figure) and parameter within the function group.

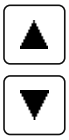

- Alter the value of the selected parameter.

- Quit parameter input function.

13.09.02 List of parameters

Group	Parameter	Description	Setting range	Set value
100	101	Bobbin thread monitor 0 = off; 1 = counter; 2 = sensor; 3 = sensor + stop; 4 = sensor + stop at defined position	0 - 4	1
	102	Needle thread monitor (0 = off; 1 = on)	0 -1	1
	103	Fade-out stitches needle thread monitor. The number of stitches, during which the needle thread monitor is not activated during sewing, is changed.	0 – 99	5
	104	Fade-out stitches bobbin thread monitor. The number of stitches, during which the bobbin thread monitor is not activated during sewing, is changed.	0 – 99	5
	105	Reaction time needle thread monitor. The sensitivity of the needle thread monitor is altered (1 = quickest reaction, max. sensitivity)	1 - 9	1
	106	Retracing stitches The number of stitches which are automatically retraced after a needle thread error, is changed.	0 - 99	15
	107	Automatic clamp opening 0 = off; 1 = on	0 - 1	0
	108	Flip-flop mode foot switch 0 = off; 1 = on	0 - 1	1
	109	Jig monitoring 0 = off; 1= Jig monitoring; 2 = automatic program number selection	0 - 2	0
	110	Demo mode 0 = off; 1 = on	0 - 1	0
	111	Mode for bobbin thread slide and needle turn setting 0 = off, 1 = auto, 2 = manual via out1, 3 = auto and manual	0 - 1	1
	114	Automatic switch to next sequence 0 = off; 1 = on	0 - 1	1

Group	Parameter	Description	Setting range	Set value
100	115	Min. X-Coordinate	-6000 bis max. X-Coordinate	-6000
	116	Max. X-Coordinate	min. X-Coordinate to 6000	6000
	117	Min. Y-Coordinate	-7000 bis max. Y-Coordinate	-7000
	118	Max. Y-Coordinate	min. Y-Coordinate to 0	0
	131	0 = thin material / lightweight template (< approx. 12 kg) 1 = thick material / heavy-weight template (> approx. 12 kg)	0 - 1	0
	140	Thread wiper 0 = off; 1 = on	0 - 1	1
	141	Needle holder 1 = 1-Needle, 2 = 2-Needle	1 - 2	2
	142	Key tone 0 = off; 1 = on	0 - 1	1
	143	Function thread puller vibrating pressur foot up 0 = off; 1 = on	0 - 1	0
	144	Template cover monitor 0 = off; 1 = on	0 - 1	1
	145	Short start thread 0 = off; 1 = on	0 - 1	0
	150	Level 1 - 9 of vibrating pressur foot level	0 -99 [0.1 mm]	20
	151	Level 1 - 9 of vibrating pressur foot stroke	0 -99 [0.1 mm]	20
200	202	Jig monitoring 0 = not fitted; 1 = RFID; 2 = Barcode	0 - 3	0
	206	Increment correction X-motor	-30 - +30	0

Group	Parameter	Description	Setting range	Set value
200	207	Increment correction Y-motor	-30 - +30	0
	208	Clamp correction	-10 - +10	0
300	301	NIS (carriage start) [°]	0 – 360	80
	302	Take-up lever tdc [°]	0 – 360	75
	303	Position thread trimming on [°] Point, at which the impulse for thread trimming is sent to the thread trimming valve, is changed (° = degree after t.d.c. needle bar).	0 – 360	200
	304	Position thread trimming off [°]	0 – 360	345
	305	Position thread tension open when trimming the thread [°]	0 – 360	15
	306	Position thread tension closed when sewing [°] start	0 – 360	200
400	401	Thread clamp on [0.01 s] Delay time for opening thread clamp when sewing starts is changed.	10 - 256	20
	402	Thread wiper [0.01 s] Duration of thread pulling is changed.	10 - 256	30
	403	Needle cooling [0.01 s] Duration of air cooling for needle after sewing stop.	10 - 256	200
	404	Time thread wiper clamp no pressure [0,01s]	10 - 256	200
	406	Time thread puller (Start thread)	10 - 256	30
	410	Delay stitches thread wiper open (143=ON)	0 - 99	2
	411	Delay stitches bobbin thread clamp open	0 - 99	2
500	501	Reduced speed	200 - max.	max.
	502	Cutting speed (positioning speed)	50 - 250	180
	503	Speed for slow start stitches	200 - 700	400
	504	Slow start stitches Number of stitches, which are to be sewn at reduced speed when sewing starts, is changed	0 – 99	3

13.09.03 Carriage start (NIS)

This function changes the time for starting the motors of the clamp drive (º = degree after t.d.c. needle bar).

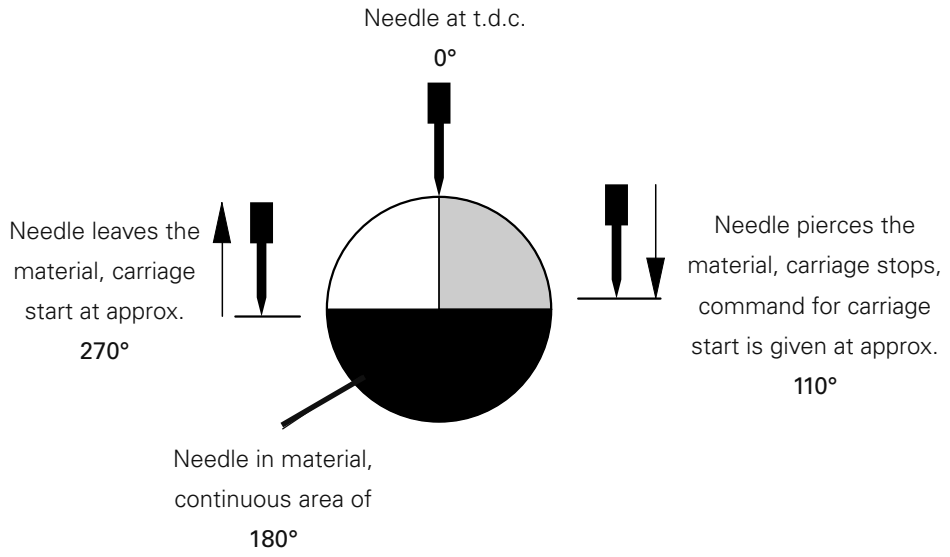

The command for the carriage start is given when the needle pierces the material. The carriage, however, starts half a revolution later (180º), when the needle leaves the material.

Under certain circumstances the stitch formation can be influenced by the setting.

13.10 Photocell for the template cover monitoring

Requirement

1. LED **5** must be on when the frame cover **6** is closed.
2. LED **7** must be on when the frame cover **6** is open.

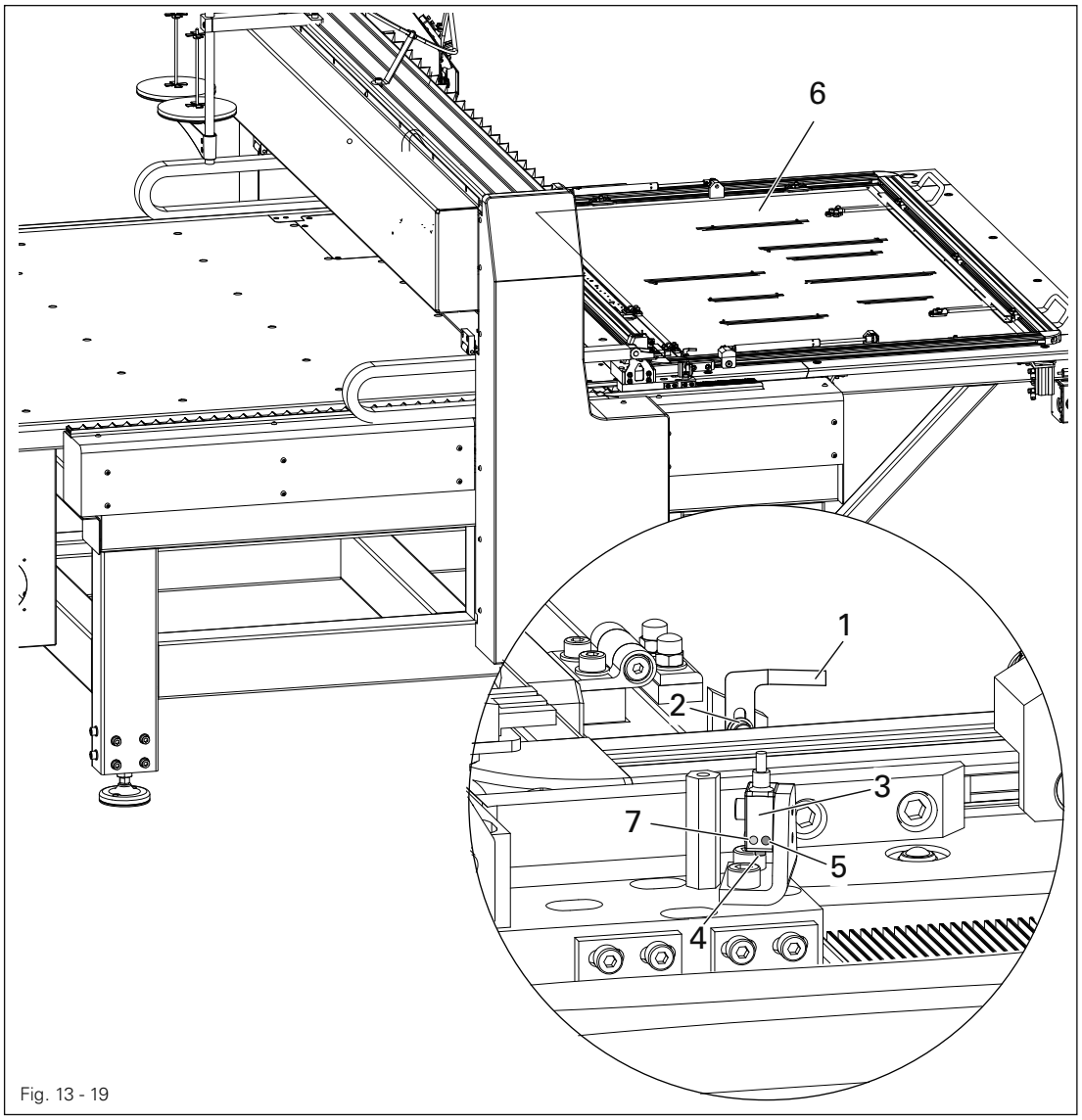

Fig. 13 - 19

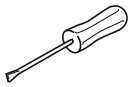

- Set the cam switch **1** (screw **2**) by shifting and bending, until the photocell **3** flashes towards the reflection face of the cam switch **1**.
- Press down key **4** for approx. **5** seconds until LED **5** flashes quickly.
- Lift and close the template cover **3** several times
- Confirm by pressing key **4**.
- Press key **4** again within **5** seconds. The starting function changes from the set-up "bright" (standard) to "dark".
- Carry out a function control in accordance with requirements **1** and **2**.

Extended function control:

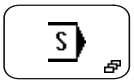

- Call up the service menu.

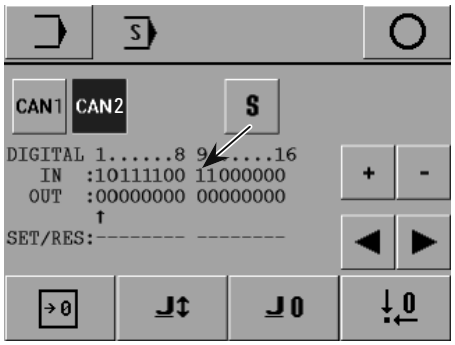

- CAN 2 input 9 (see arrow) must switch from 1 to 0, when when the template cover 6 gets lifted.

14 Control

14.01 Basic setting / Diagnosis / Pin assignment

14.01.01 Power unit A30

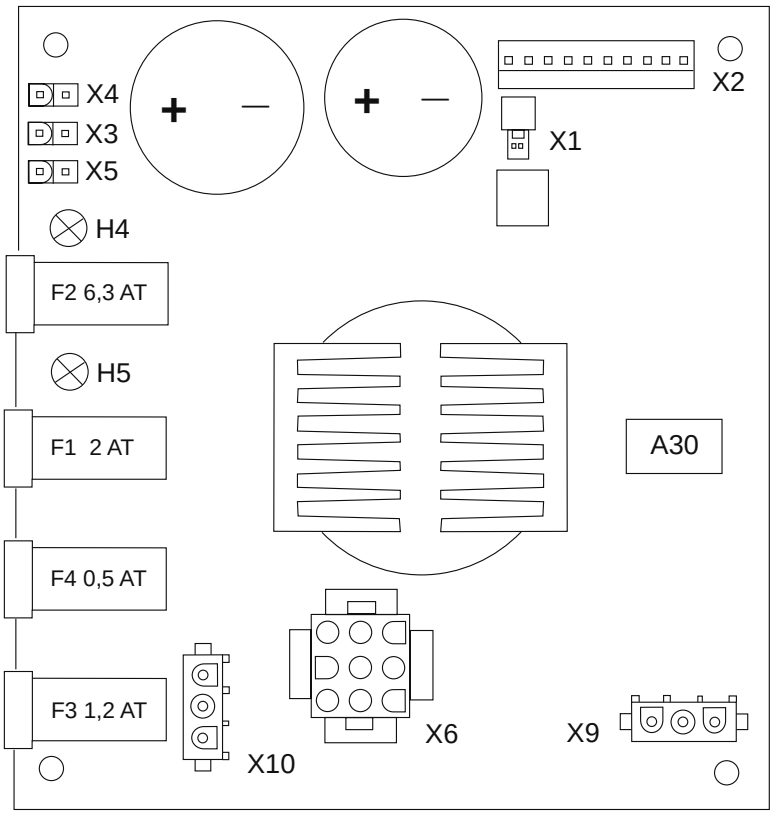

F1 ..... 2AT 230 V mains
F2 ..... 6,3 AT 24V
F3 ..... 1,2AT U BDF (control panel)
F4 ..... 0,5AT 5V

H4 ..... 24V
H5 ..... 5V

X1 ..... 24V ventilator
X2 ..... electric tension A20 / BS3
X3 ..... 24V XW1
X4 ..... 24V
X5 ..... 24V
X6 ..... transformer secondary
X9 ..... transformer primary
X10 ..... 230 V mains

14.01.02 Basic control unit A20

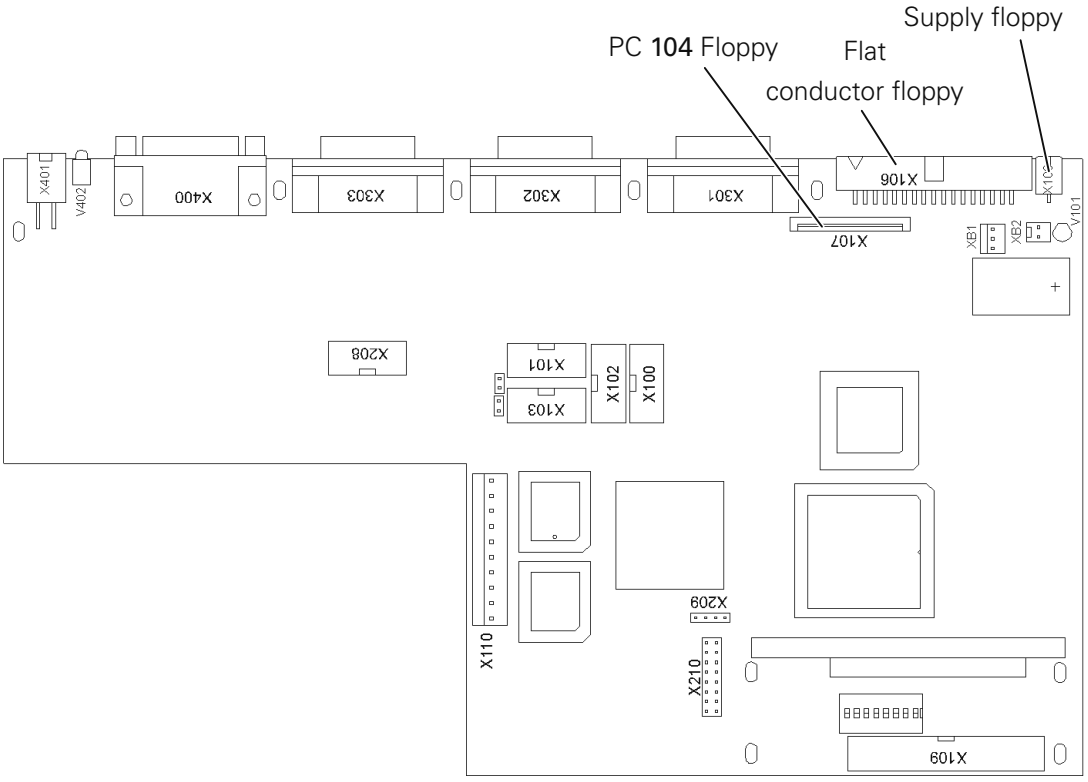

Pin assignment

X103 (COM1)

X101 (COM2)

PIN	Signal	PIN	Signal
1	Vterm1	6	
2	RxD	7	RTS
3	TxD	8	CTS
4		9	Vterm2
5	GND		

X301 (Z-axis / motor 1)
X301 (X-axis / motor 2)
X302 (Y-axis / motor 2))

PIN	Signal	PIN	Signal
1	Pulse +	9	Pulse -
2	Direction +	10	Direction -
3	Gate/Enable +	11	Gate/Enable -
4	Current control +	12	Current control -
5	Vex +	13	Vex -
6			
7	Input2 +	14	Input2 -
8	Input1 +	15	Input1 -

X208 (CAN-Bus)

PIN	Signal	PIN	Signal
1	P8HA +	6	
2	P8HA -	7	
3	DoRi +	8	DoRi -
4	GND	9	GND
5			

X400 (main drive)

PIN	Signal	PIN	Signal
1	Screening	14	A_A
2	TxD_A	15	A_B
3	RxD_A	16	B_A
4	TxD_B	17	B_B
5	RxD_B	18	I_A
6		19	I_B
7	GND	20	GND
8		21	A_OC
9	R1_A	22	B_OC
10	R1_B	23	I_OC
11	R2_A	24	V2
12	R2_B	25	GND
13	GND	26	Vex

X401 ((thread monitor)

PIN	Signal	PIN	Signal
1	+U_ULN	2	+U_ULN
3	POUT7	4	POUT8

14.01.03 Sewing drive A22

Before leaving the factory the sewing drive controller is equipped with the necessary operating software. This software may only be replaced by appropriately trained personnel.

The LED "Power on" shows that the unit is ready for operation. Diagnosis functions and fuses are not available. If error messages appear on the machine display, see **Chapter 14.02.04 Sewing motor errors.**

Pin assignment

X1 (Synchronizer)

PIN	Signal	PIN	Signal
1	FA	6	
2	FB	7	
3	SM	8	
4	ADTC1	9	GND
5	+ 5V		

X2 (Commutating signal generator)

PIN	Signal	PIN	Signal
1		6	KA
2		7	KB
3		8	KC
4	ADTC2	9	GND
5	+ 5V		

X 3 (Interface)

PIN	Signal	PIN	Signal
1	GND	14	A
2	TxD	15	A\
3	RxD	16	B
4	TxD\	17	B\
5	RxD\	18	Index
6		19	Index\
7	GND	20	
8		21	
9	REF1	22	
10	REF1\	23	
11	REF2	24	
12	REF2\	25	
13	GND	26	

X6 (Mains)

PIN	Signal
1	PE
2	N
3	L1

X14 (Motor)

PIN	Signal
1	PE
2	U
3	V
4	W

14.02 Description of the error messages

14.02.01 General errors

Display	Description	Reaction
ERROR: 3	Error in allocation EMS memory	Switch off error
ERROR: 4	C167 not reacting	Switch off error
ERROR: 5	Boot file (c167boot.bin) cannot be opened	Switch off error
ERROR: 6	Error in flash-programming	Switch off error
ERROR: 7	Error when opening a file	Switch off error
ERROR: 8	Battery	Reset
ERROR: 9	Firmware version conflict	Switch off error
ERROR: 10	CAN-error (reset)	Switch off error
ERROR: 11	CAN-error (no. of nodes)	Switch off error
ERROR: 12	Communication main drive	Switch off error
ERROR: 13	CAN node feed attached, feed not configured	Switch off error
ERROR: 14	CAN node for feed missing	Switch off error
ERROR: OPERATING DATA CHECK SUM (COLD START CARRIED OUT)	Operating data check sum	Cold start
NEW OPERATING SOFTWARE (COLD START CARRIED OUT)	New operating software	Cold start
COLD START CARRIED OUT	Cold start	Cold start
ERROR: 101	C167-error	Switch off error
ERROR: 102 (#node no.)(status)	CAN-error, status = Bit1 - node inactive, Bit 8 - short circuit	Switch off error
ERROR: 103	End stage (SmX)	Reset
ERROR: 104	End stage (SmY)	Reset
ERROR: 105	Error compressed air	Reset
FEHLER: 106	End stage (SmZ)	Reset
ERROR: 201 (#sewing motor error)	Sewing motor error (see Chapter 14.02.04 Sewing motor errors)	Reset
ERROR: 202 (#RFID-ERROR)	Error while reading transponder	Reset
ERROR: 210 (#No.))	Command byte of NM-interface not free,command could not be given	Reset
ERROR: 211	Coordinates outside the sewing area	Reset
ERROR: 212	Stitch length too long (>6 mm)	Reset

Display	Description	Reaction
ERROR: 213	Carraige initiators not found	Reset
ERROR: 214	Jig not inserted or incorrectly inserted	Reset
ERROR: 215	Ramp not completed	Reset
ERROR: 216	Thread not cut (Jig cannot be opened)	Reset
ERROR: 217	No jig inserted, program number could not be read	Reset
ERROR: 218	Invalid program number	Reset
ERROR: 219	Wrong jig	Reset
ERROR: 220	Incorrect jig code	Reset
ERROR: 221	No carriage start (NIS)	Reset
ERROR: 222	Scan template code with barcode scanner	Reset
ERROR: 223	Thread not cut in loading position	Reset
ERROR: 224	Vibrating pressur foot initiator not found	Reset
ERROR: 225	Vibrating pressur foot not ready	Reset
ERROR: 226	Table lifted down	Reset
ERROR: 240 (cause)	Move to starting point blocked	Reset
ERROR: 241 (cause)	Move to Home blocked	Reset
ERROR: 242 (cause)	Vibrating pressur foot down locked	Reset
ERROR: 244 (cause)	Move to machine zero point blocked	Reset
ERROR: 245 (cause)	Moving in sewing program blocked	Reset
ERROR: 246 (cause)	Tacting blocked	Reset
ERROR: 301	Carriage position invalid	Reset
ERROR: 305	Configuration invalid	Reset
ERROR: 306	Needle position (t.d.c.) invalid	Reset
ERROR: 307	Bobbin cover not closed	Reset
ERROR: 308	Machine not in basic position	Reset
ERROR: 309	Jig monitoring unit not fitted	Reset
ERROR: 310	File not on source	Reset
ERROR: 311	Source reading error, file cannot be opened	Reset
ERROR: 312	Target writing error, file cannot be opened	Reset
ERROR: 313	Source reading error	Reset
ERROR: 314	Target writing error	Reset
ERROR: 315	File configuration cannot be opened	Reset
ERROR: 316	Error when opening MDAT-file	Reset
ERROR: 317	Writing error in MDAT-file	Reset
ERROR: 318	Machine data identification incorrect	Reset
ERROR: 318	Machine data identification incorrect	Reset

Display	Description	Reaction
ERROR: 319	Reading error in MDAT-file	Reset
ERROR: 320	Prog. with incorrect machine class	Reset
ERROR: 321	Prog. with incorrect machine version	Reset
ERROR: 322	Prog. with incorrect data set version	Reset
ERROR: 323	Incorrect program number	Reset
ERROR: 324	No carriage start, NIS	Reset
ERROR: 325	Memory overflow when writing file to flash	Reset
ERROR: 326	Flash writing error	Reset
ERROR: 327	Image leaves sewing error	Reset
ERROR: 328	Block not marked or incorrectly marked	Reset
ERROR: 329	Program too large	Reset
ERROR: 330 (#Stitch generation error) (#Section number)	Conversion error	Reset
ERROR: 331	Stitch too large	Reset
ERROR: 332	Check-point not permitted	Reset
ERROR: 333	Thread not cut during setting of vibrating pressur foot zero point	Reset
ERROR: 334	Vibrating pressur foot position invalid	Reset
ERROR: 335	Number of needles not same in programme and parameter	Reset
ERROR: 336	Error during switch-over to network share	Reset
ERROR: 337	Error during switch-over to SD share	Reset
ERROR: 341 (#sewing motor error)	Sewing motor error, (see Chapter 14.02.04 Sewing motor errors)	Reset
ERROR: 342 (# program number)	Program incomplete	Reset
ERROR: 343 (# program number)	Program too large	Reset
ERROR: 344 (# program number)	Program does not exist	Reset
ERROR: 345 (# program number)	Flash reading error or program defective	Reset
ERROR: 346 (#RFID-ERROR)	Transponder read/write error	Reset
ERROR: 347 (#Program number)	Program with wrong machine class	Reset
ERROR: 347 (#Program number)	Programme contains only stitch data; cannot be processed	Reset
ERROR: 401	Text file cannot be opened	Switch off error

Display	Description	Reaction
ERROR: 402	Error when reading text file	Switch off error
ERROR: 403	Error in allocation of storage space for texts	Switch off error
ERROR: 501	Error when opening file "pikto.hex" or "vorlagen.hex"	Switch off error
ERROR: 502	No acknowledgement from control panel	Switch off error

14.02.02 CAN-errors

Error byte	Description
bit7	End stage error (short circuit)
bit6	-
bit5	-
bit4	Receive status (waiting for input object)
bit3	Transmit status (transmit output object)
bit2	Transmit status
bit1	Node time out
bit0	Node active

14.02.03 Stitch generation errors

Display	Description
1	Incorrect machine identification
2	Section "jig code"or section "obstacle" missing or on wrong place
3	Increment too large
4	Program end without thread trimming
5	Impermissible stitch length data
6	Incorrect element in geometrical data set
7	Quick motion although machine is sewing
8	Impermissible stitch length data
9	Impermissible stitch length data
10	Circle check-point = circle end point
11	Division by zero
12	Impermissible stitch length data
13	No coordinates section before curve check-point
14	Sewing area limit exceeded
15	Curve without end point
16	Mach. function buffer overflow
17	Start sewing command in loading point program
18	Incorrect curve check-point
19	Incorrect curve check-point

Display	Description
20	Incorrect curve check-point
21	Incorrect curve check-point
22	Stitch length not initialised
23	Loading point program not ended
24	Stitch width command in loading point program
25	Impermissible value for section stitch??
26	Cutting command, although thread cut
27	Start sewing command, although machine sewing
28	Cutting command in sewing-off-area
29	Sewing-off command, although thread cut
30	Cutting command directly after start sewing command
31	Start bartack too long

14.02.04 Sewing motor errors

Display	Description
1	Transmission error
2	Timeout serial interface
3	Check sum error in incoming data
4	Timeout command
30h (48)	Timeout-slave expired (command string incomplete)
31h (49)	Incorrect command code
32h (50)	Framing or parity error
33h (51)	Check sum incorrect
34h (52)	Incorrect date request
35h (53)	No parameter programmable (motor operation)
36h (54)	Parameter does not exist
37h (55)	Incorrect parameter value
39h (57)	Incorrect machine speed
3Ah (58)	Incorrect position
3Eh (62)	System mark not recognised
52h: (82)	Short circuit in motor
55h: (85)	No increments
56h: (86)	Motor blocked
58h: (88)	Increment transmitter connector missing
70h: (112)	Time-out over
80h: (128)	Starting error after mains on
81h: (129)	Sync mark not found during startup to mains
82h: (130)	Brake triggered too often
83h: (131)	Overvoltage detected
84h: (132)	Power sensor outside tolerance range

14.02.05 RFID error

Display	Description
0:	no error
1:	Com port hardware error
2:	RFID Reader protocol checksum incorrect (transmission error)
3:	RFID Reader frame receive timeout (reader unresponsive)
4:	RFID Reader received unexpected RFID response frame
5:	incorrect RFID transponder found (no Mifare Ultralight)
6:	machine class string does not match transponder class string, e.g.: machine class string = "3590-5x/12070" Transponder class string = "3590-12070"
7:	Read/write error for card persists after five attempts (probably no card in field)
8:	Transponder user data checksum incorrect

14.03 List of outputs and inputs

14.03.01 CAN-nodes 1

Output	Term	Function	Remark
OUT1	Y1	Needle cooling blower On	Valve
OUT2	Y2.1	Thread wedeler forward 1	Valve
OUT3	Y2.2	Thread wedeler forward 2	Valve
OUT4	Y4	Top thread clamp closed	Valve
OUT5	Y5	Thread tension open	Valve
OUT6	Y6	Secondary thread tension closed	Valve
OUT7	Y7	Needle turn setting On	Valve
OUT8	Y8	Press pad down	Valve
OUT10	Y30	Thread trimming on	Valve
OUT11	Y31	Bobbin thread clamp open	Valve
OUT12	Y32	Bobbin thread slide On	Valve
OUT13	Y33	Material presser open	Valve
OUT14	Y34	Hook lubrication 1 On	Valve
OUT15	Y35	Hook lubrication 2 On	Valve

Input	Term	Function
IN1	e29	Zero position SM3 (vibrating pressur foot)
IN2	therr1	Top thread error 1
IN3	therr2	Top thread error 2
IN4	e2	Thread wiper in home position
IN5	temp	Temperature monitoring
IN6	e33	Material presser down
IN7	boberr1	Bobbin thread error 1
IN8	boberr2	Bobbin thread error 2
IN9	ac_ok	Undervoltage monitoring (optional)
IN10	press	Compressed air OK
IN11	fkey	Key switch
IN12	foot1	Foot switch 1. Step (template open/closed)
IN13	foot2	Foot switch 2. Step (start)
IN14	tlinks_stop	Template stop left to e.g. "Stop"
IN15	trechts_stop	Template stop right to e.g. "Stop"
IN16	e81	table lifted up

14.03.02 CAN-nodes 2

Output	Term	Function	Remark
OUT1	Y50.1	Sewing head open	Impulse valve
OUT2	Y50.2	Sewing head down	Impulse valve
OUT3	Y51.1	Template lock open	Impulse valve
OUT4	Y51.2	Template lock closed	Impulse valve
OUT5	Y52	Template stop left open	Valve
OUT6	Y53	Template stop right open	Valve
OUT7	Y54	Sewing head lock Off	Valve
OUT8	bobres1	Reset bobbin thread monitor 1	Dig. Signal
OUT9	bobres2	Reset bobbin thread monitor 2	Dig. Signal
OUT10			
OUT11			
OUT12			
OUT13	Out1	Prog. output 1 (bobbin thread slide)	Dig. Signal
OUT14	Out2	Prog. output 2	Dig. Signal
OUT15	Out3	Prog. output 3	Dig. Signal
OUT16	Out4	Prog. output 4	Dig. Signal

Output	Term	Function
IN1	e50.1	Sewing head up
IN2	e50.2	Sewing head down
IN3	e51.1_1	Template lock closed right
IN4	e51.1_2	Template lock closed left
IN5	e80	Templates inserted right
IN6	e79	Templates inserted left
IN7	e78	Zero position SMX
IN8	e77	Zero position SMY
IN9	e76	Template cover closed
IN10	e75	Bobbin cover closed
IN11	e54	Sewing head lock unlocked
IN12		
IN13	in1	Programmable Input **1**
IN14	in2	Programmable Input **2**
IN15	in3	Programmable Input **3**
IN16	in4	Programmable Input **4**

14.03.03 Special outputs

Term	Function	Remark
y4fkt	Top thread clamp opening with delay	
y2fkt_aus	Thread wiper in home position	
y2fkt_ein	Thread wiper On	
y2fkt_ drucklos	Thread wiper de-pressurised	
y2fkt	Thread wiper function	
hfuss_auf	Vibrating pressur foot up	
y9_fkt	Thread puller function	
y7_y32fkt	Needle turn setting and bobbin thread slide on / off	

14.04 Boot key

Fig. 14 - 01

This work may only be carried out by properly instructed personnel!
Do not touch any live parts!
Danger to life through electric voltage!

15 Pneumatics-switch diagram

The control elements and valves are in the machine's basic position. Main switch -ON, compressed air -ON

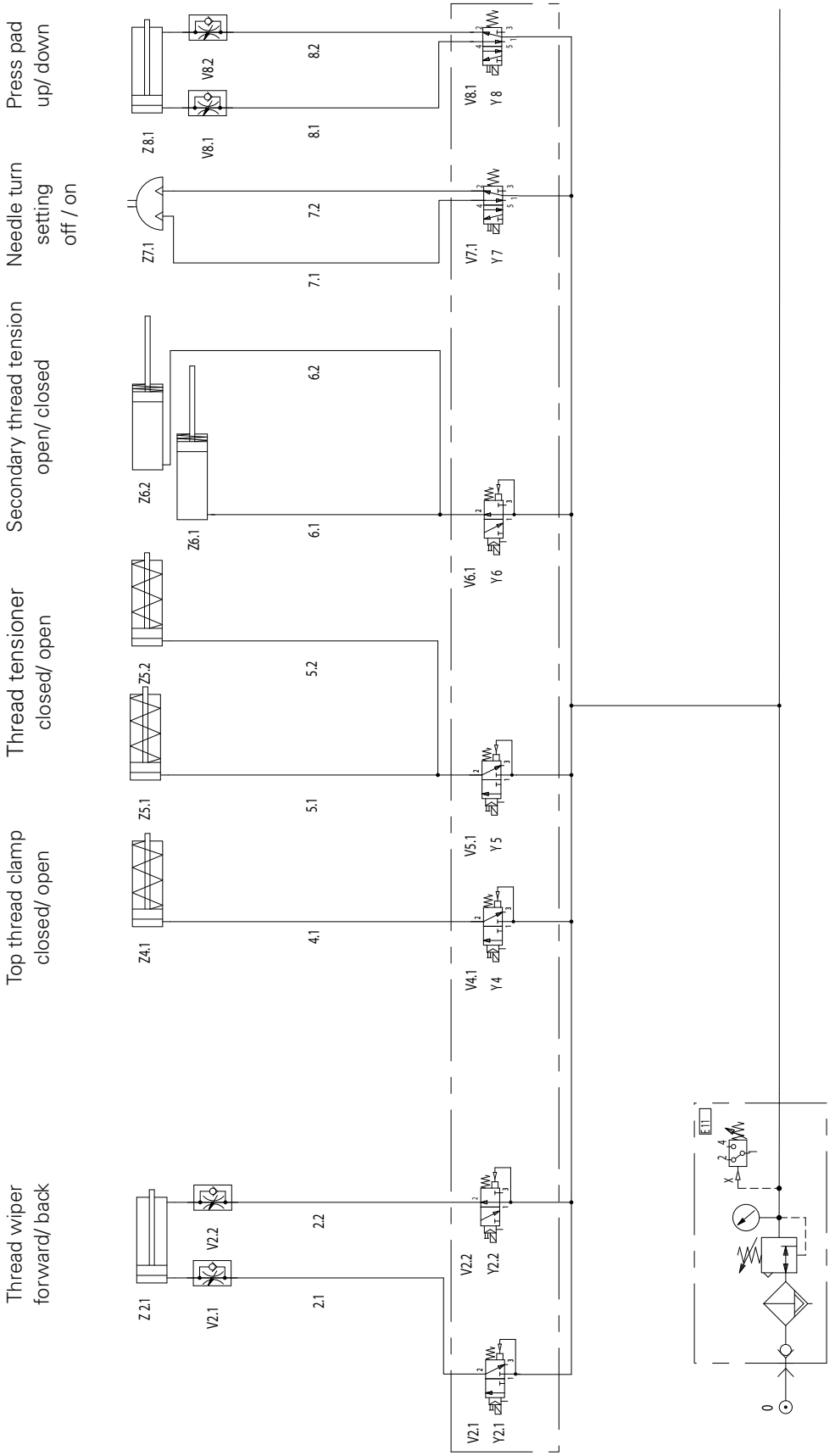

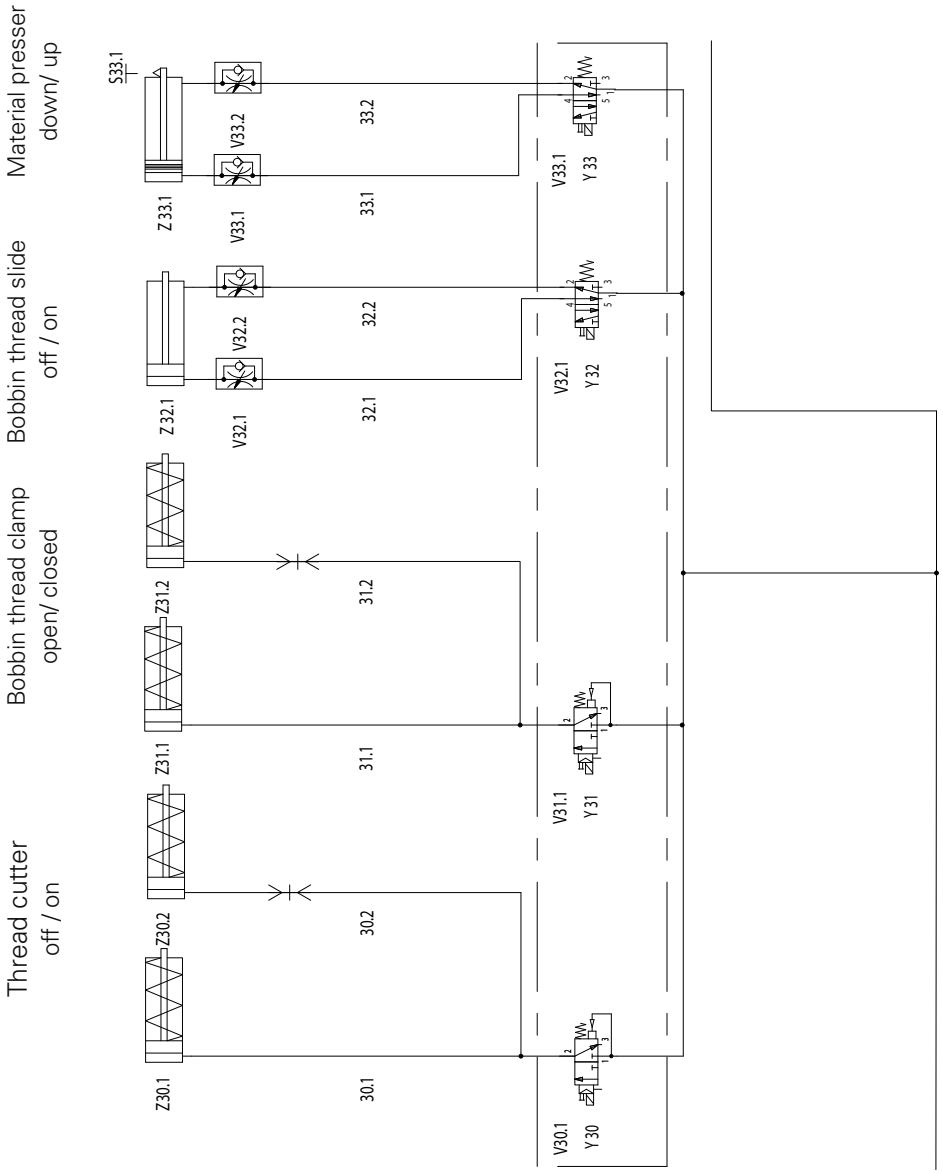
Material presser down/ up
Bobbin thread slide off / on
Bobbin thread clamp open/ closed
Thread cutter off / on
S33.1
Z33.1
V33.2
V33.1
33.2
33.1
V33.1
Y 33
Z32.1
V32.2
V32.1
32.2
32.1
V32.1
Y 32
Z31.2
Z31.1
31.2
31.1
V31.1
Y 31
Z30.2
Z30.1
30.2
30.1
V30.1
Y 30

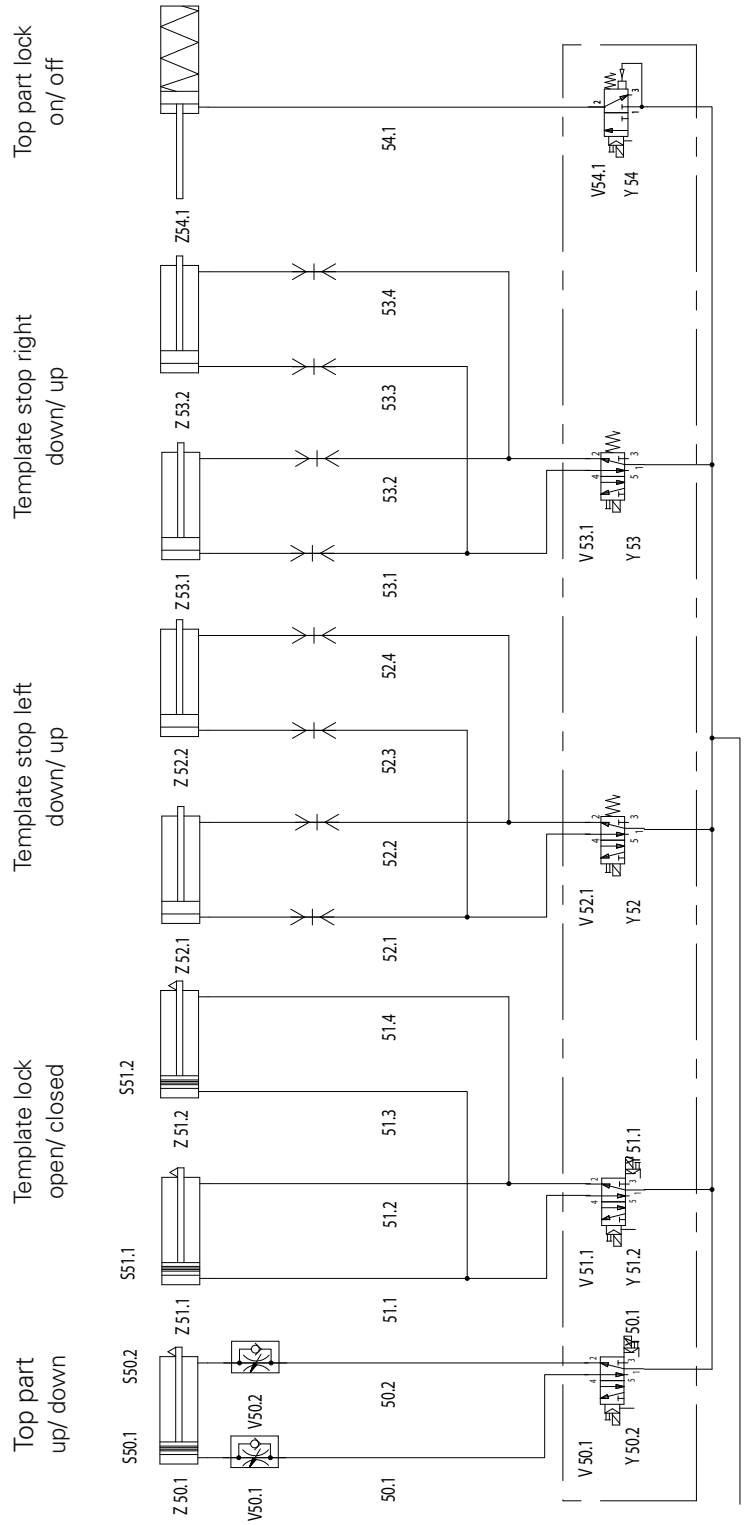
Top part lock on/ off
Template stop right down/ up
Template stop left down/ up
Template lock open/ closed
Top part up/ down
Z 54.1
54.1
V54.1
Y 54
Z 53.2
53.4
53.3
Z 53.1
53.2
53.1
V 53.1
Y 53
Z 52.2
52.4
52.3
Z 52.1
52.2
52.1
V 52.1
Y 52
S51.2
Z 51.2
51.4
51.3
S51.1
Z 51.1
51.2
51.1
V 51.1
Y 51.2
S50.2
S50.1
Z 50.1
50.2
50.1
V50.2
V50.1
V 50.1
Y 50.2

16 Circuit diagrams

Reference list for circuit diagrams**n 91-191 562-95**

A11	CAN 1 S200 =>1
A12	CAN 2 S200 =>2
A20	Control unit BS3
A22	Sewing motor control MMC 1001
A24	Needle thread monitor evaluation
A25	Needle thread monitor optic
A26	Control panel BDF-P1
A30	Power supply BS3 160 VA
A31	Power supply 48 V
A42	Step motor power amplifier SM1
	Description of LEDs (A42) 1 DC bus live 2 Operational, power amplifier authorised, motor live 3 Short circuit between 2 motor phases or against protective earth 4 Static = excessive power amplifier temperature, blinking = excessive motor temperature 5 Overvoltage (DC bus > 420 V DC) 6 Undervoltage (DC bus > 180 V DC) 7 Error message on rotation monitoring 8 Encoder connected and operational 5+6 Power amplifier deactivated, motor currentless 3 - 6 Frequency too high at signal point
A43	Step motor power amplifier SM2
	Description of LEDs A43 LED red (error) LED amber (temperature) LED green (supply voltage)
A44	Step motor power amplifier SM3 Red LED on = error Green LED on = voltage OK
A60	Needle thread monitor evaluation
A61	Needle thread monitor optic
A62	Needle thread monitor evaluation
A63	Needle thread monitor optic
A64	Bobbin thread monitor evaluation
A65	Bobbin thread monitor optic
A66	Bobbin thread monitor evaluation
A67	Bobbin thread monitor optic
A75	RFID clamp recognition
F1	Circuit breaker 16 A
F2	Circuit breaker 16 A

F1	A30 power supply fuse 2.0 A
F2	A30 power supply fuse 6.3 A
F3	A30 power supply fuse 1.2 A
F4	A30 power supply fuse 0.5 A
F9	H11 sewing lamp fuse 0.5 A
H1	A30 LED, D4 24V = > F1-2 A
H2	A30 LED, D5 5V = > F3-1,2 A
H3	A22 LED, Power = >
H1	Sewing lamp
K54	A11 CAN1 ac-ok voltage monitor (optional)
K20	A11 CAN1 thread tensioner open
M1	Sewing motor
M2	Step motor X axis SM1
M3	Step motor Y Axis SM2
M4	Step motor Z axis SM3
Q1	Main switch
SNL	Emergency stop left
SNR	Emergency stop right
T1	Transformer 160 VA A30 power supply
A11 X200	CAN1 bus selection (Dip 2 S200)
A11 X300	Outputs OUT 1 – OUT 15
A11 X400	Inputs IN 1 – IN 16
A12 X200	CAN2 bus selection (Dip 3 S200)
A12 X300	Outputs OUT 1 – OUT 15
A12 X400	Inputs IN 1 – IN 16
A20 X101	COM 2 interface
A20 X103	COM 1 interface
A20 X208	CAN – bus
A20 X301	Z axis/ motor SM 3 (M4)
A20 X302	X axis/ motor SM 1 (M2)
A20 X303	Y axis/ motor SM 2 (M3)
A20 X400	Main drive sewing motor M1
A20 X401	Stop motion device

A22 X1	Sewing motor M1
A22 X2	Sewing motor M1
A22 X5	Interface
A22 X6	Mains power 230 V AC
A30 X1	Power supply fan
A30 X2	BS3 power supply
A30 X3	+ 24 V and 0 V
A30 X4	+ 24 V and 0 V
A30 X5	+ 24 V and 0 V
A30 X6	Secondary transformer
A30 X9	Primary transformer 230 V AC
A30 X10	Mains power 230V AC
A42 XC1	Mains power 230 V AC SM1 amplifier
A42 XC1	Step motor SM1 amplifier
A42 XC2	Axis 1 selection
A43 XC1	Power 230V AC SM2 amplifier
A43 XC1	Step motor SM2 amplifier
A43 XC2	Axis 2 selection
A43 XC1	Step motor SM3 amplifier
A43 XC2	Axis 3 selection
XW1	Main terminal strip 230 V AC, and 24 V DC
X30	Wall socket 230 V AC/ 10 A
X31	3x-Wall socket 230 V AC/ 10 A
X38	Treadle switch connector
X41	A26 Operating panel BDF-P1
X42	A26 Operating panel BDF-P1 power supply
X43	A26 Operating panel BDF-P1 signal connection
X44	Sewing motor M1
X75	RFID template recognition (optional)
Y1	A11 CAN1 Needle cooler On
Y2.1	A11 CAN1 Thread wedeler forward 1
Y2.2	A11 CAN1 Thread wedeler forward 2
Y4	A11 CAN1 Top thread clamp closed
Y5	A11 CAN1 Thread tension open
Y6	A11 CAN1 Add-on thread tension closed
Y7	A11 CAN1 Needle turn setting On
Y8	A11 CAN1 Retainer down
Y30	A11 CAN1 Bobbin thread clamp open
Y31	A11 CAN1 Thread clamp open

Y32	A11 CAN1 Bobbin thread slide On
Y33	A11 CAN1 Material presser open
Y50.1	A11 CAN1 Top part up
Y50.2	A11 CAN1 Top part down
Y51.1	A11 CAN1 Template lock open
Y51.2	A11 CAN1 Template lock closed
Y52	A11 CAN1 Template stop left open
Y53	A11 CAN1 Template stop right open
Y54	A11 CAN1 Top part lock Off
Z1	Dejam filter (10VSK 1)

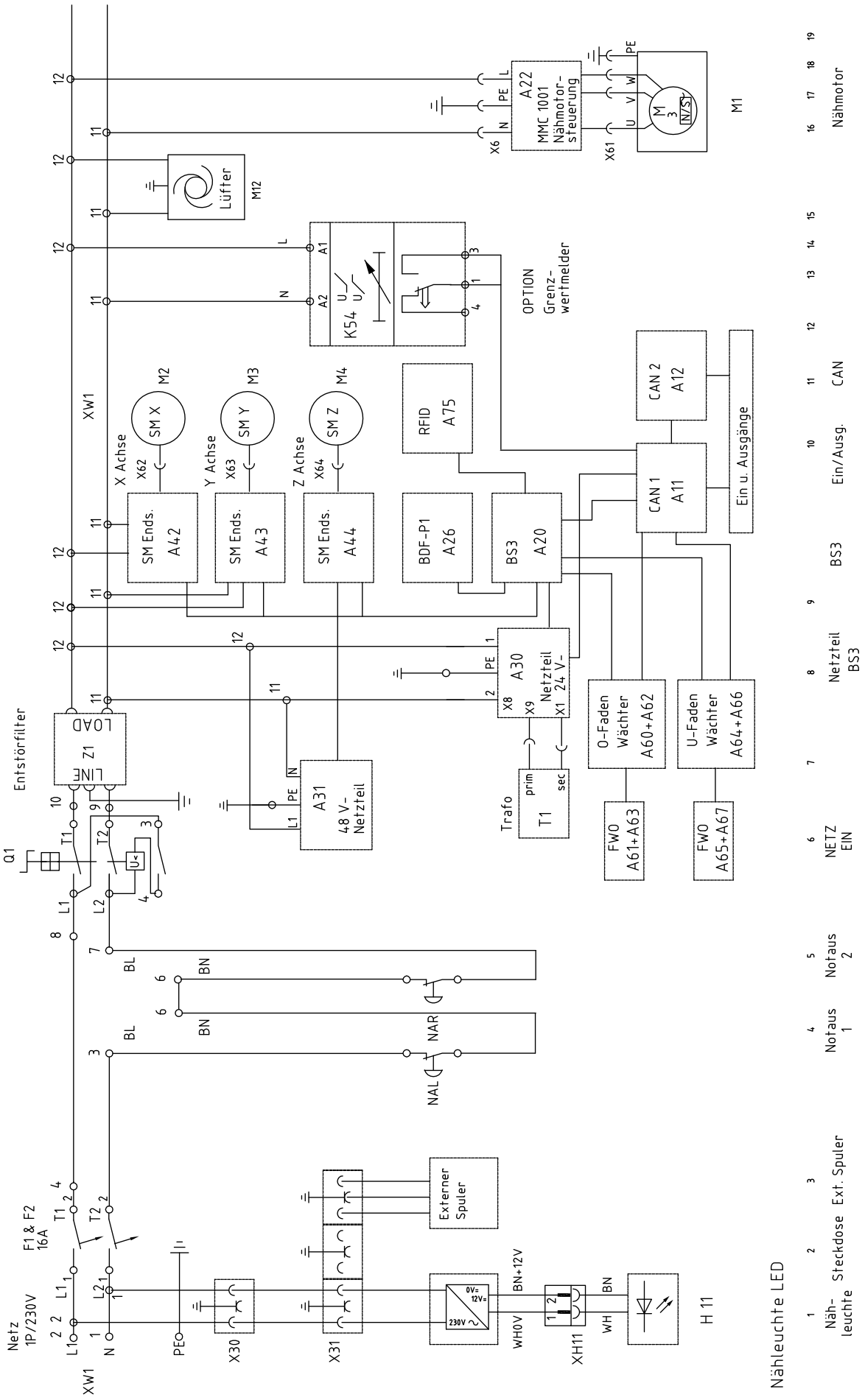
Netz
1P/230V
F1 & F2
16A
Entstörfilter
LINE
Z1
LOAD
Q1
XW1
X30
X31
XH11
H 11
Externer Spuler
NAL
NAR
Lüfter
M12
K54
OPTION
Grenz-
wertmelder
SM X
SM Y
SM Z
M2
M3
M4
X Achse
Y Achse
Z Achse
SM Ends.
A42
A43
A44
BDF-P1
A26
BS3
A20
RFID
A75
CAN 1
A11
CAN 2
A12
Ein u. Ausgänge
A30
Netzteil
24 V-
A31
48 V-
Netzteil
Trafo
T1
prim
sec
O-Faden
Wächter
A60+A62
U-Faden
Wächter
A64+A66
FWO
A61+A63
FWO
A65+A67
A22
MMC 1001
Nähmotor-
steuerung
M1
Nähmotor
Nähleuchte LED
Näh-
leuchte
Steckdose
Ext. Spuler
Notaus
1
Notaus
2
NETZ
EIN
Netzteil
BS3
BS3
Ein/Ausg.
CAN

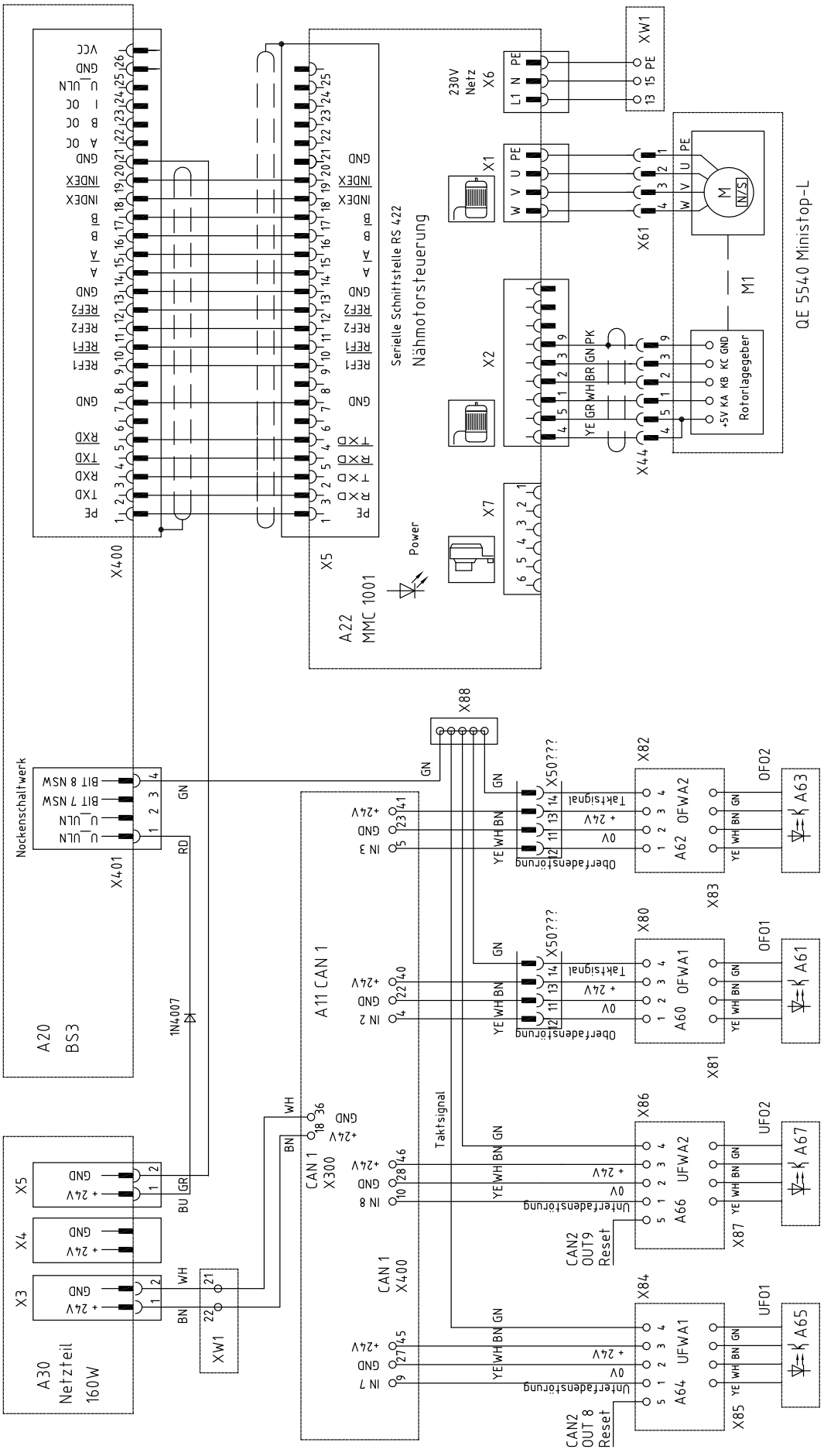
A22
MMC 1001
Serielle Schnittstelle RS 422
Nähmotorsteuerung
Power
X5
X400
X1
X2
X7
230V
Netz
X6
XW1
X61
M1
QE 5540 Ministop-L
Roforlagegeber
X44
A20
BS3
X401
Nockenschaltwerk
1N4007
A30
Netzteil
160W
X3
X4
X5
XW1
A11 CAN 1
CAN 1
X300
CAN 1
X400
Taktsignal
CAN2
OUT 9
Reset
CAN2
OUT 8
Reset
X88
X82
A62 OFWA2
OF02
A63
X83
X80
A60 OFWA1
OF01
A61
X81
X86
A66 UFWA2
UF02
A67
X87
X84
A64 UFWA1
UF01
A65
X85
Oberfadenstörung
Unterfadenstörung
Taktsignal
+24V
0V
GND
IN 2
IN 3
IN 7
IN 8

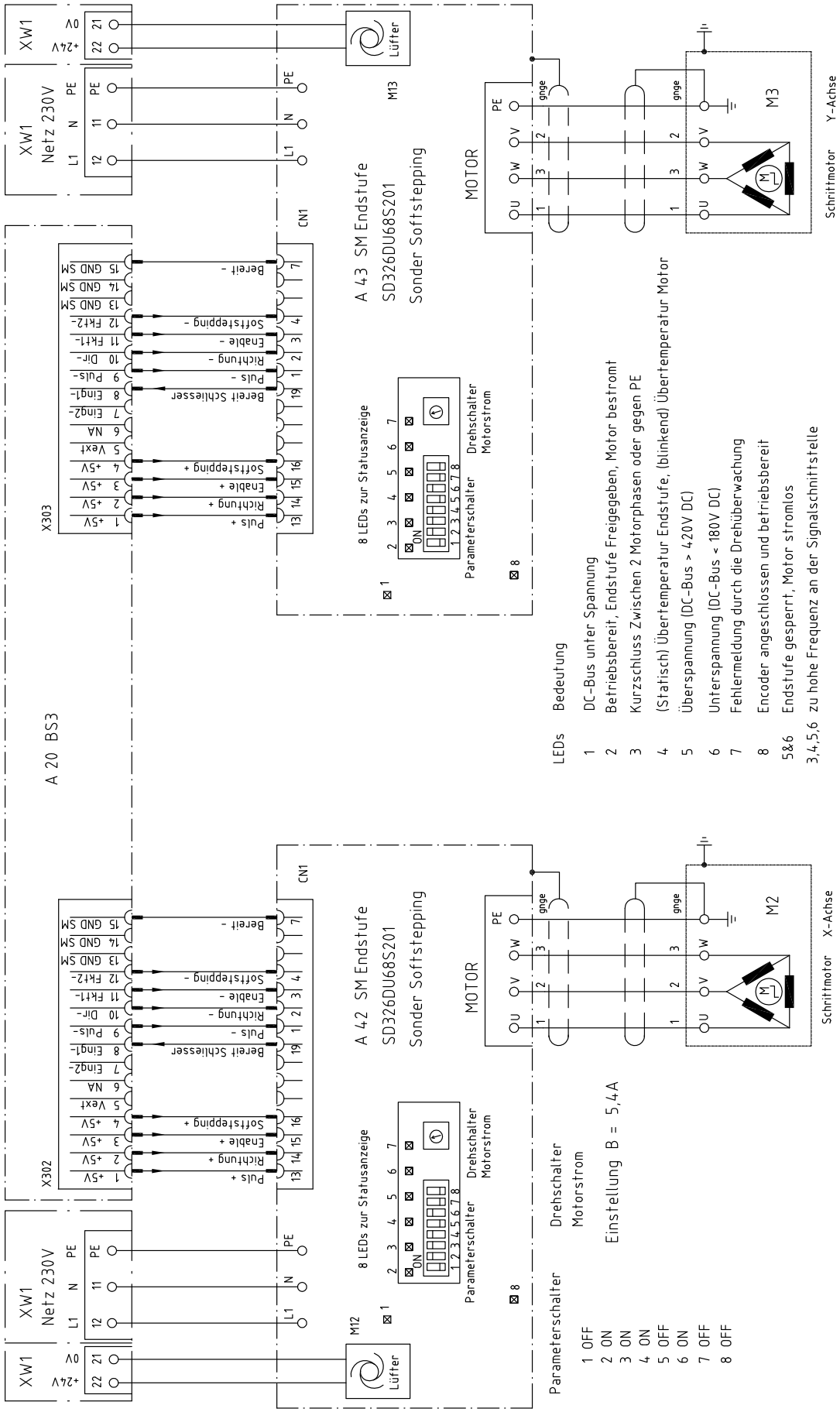
XW1
Netz 230V
+24V
0V
L1
N
PE
Lüfter
M13
M12
A 20 BS3
X303
X302
CN1
A 43 SM Endstufe
SD326DU68S201
Sonder Softstepping
A 42 SM Endstufe
SD326DU68S201
Sonder Softstepping
MOTOR
M3
M2
Schrittmotor Y-Achse
Schrittmotor X-Achse
8 LEDs zur Statusanzeige
Parameterschalter
Drehschalter Motorstrom
Einstellung B = 5,4A
1 OFF
2 ON
3 ON
4 ON
5 OFF
6 ON
7 OFF
8 OFF
LEDs Bedeutung
1 DC-Bus unter Spannung
2 Betriebsbereit, Endstufe Freigegeben, Motor bestromt
3 Kurzschluss Zwischen 2 Motorphasen oder gegen PE
4 (Statisch) Übertemperatur Endstufe, (blinkend) Übertemperatur Motor
5 Überspannung (DC-Bus > 420V DC)
6 Unterspannung (DC-Bus < 180V DC)
7 Fehlermeldung durch die Drehüberwachung
8 Encoder angeschlossen und betriebsbereit
5&6 Endstufe gesperrt, Motor stromlos
3,4,5,6 zu hohe Frequenz an der Signalschnittstelle

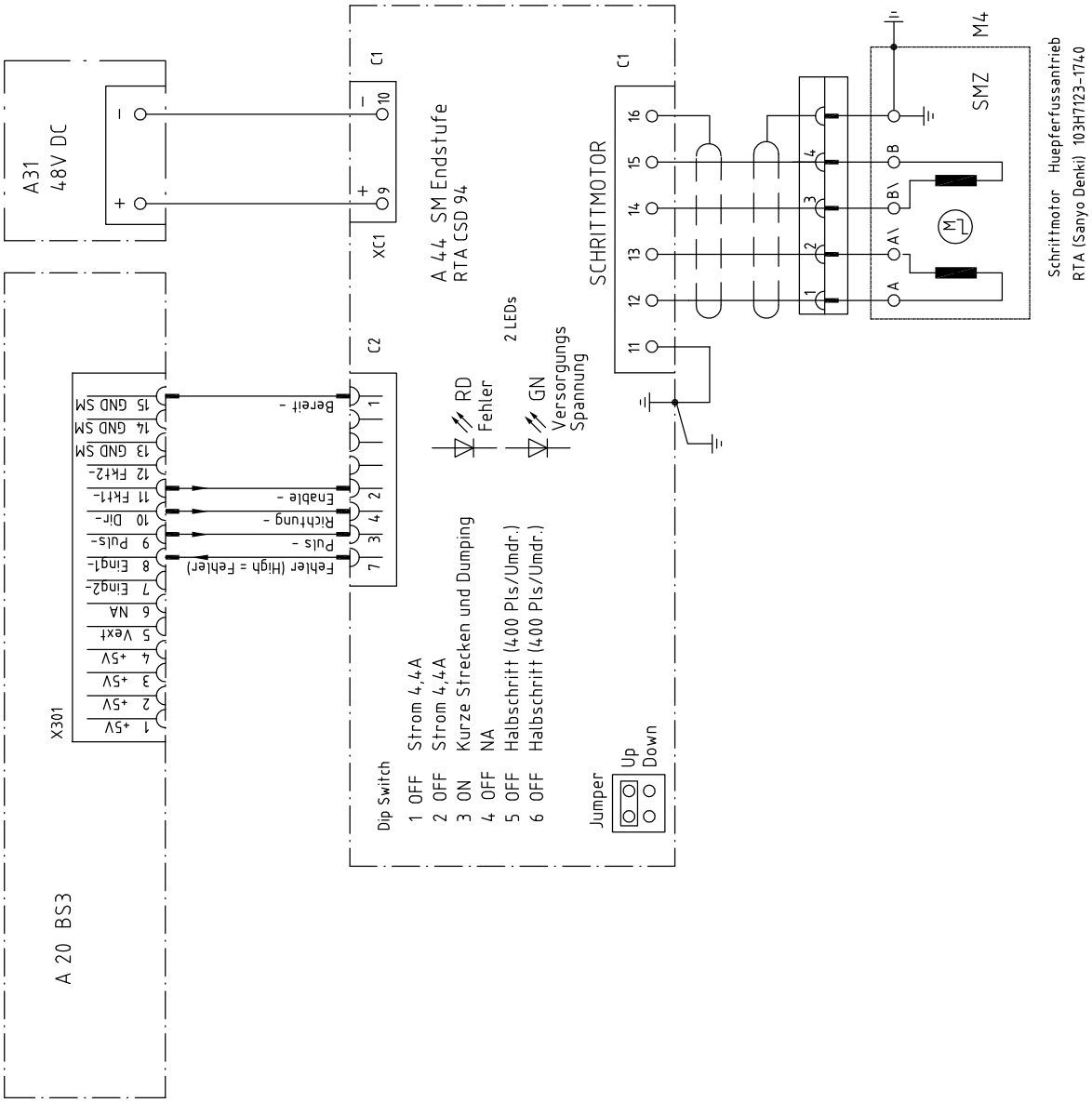
A 20 BS3
X301
1 +5V
2 +5V
3 +5V
4 +5V
5 Vext
6 NA
7 Einq2-
8 Einq1-
9 Puls-
10 Dir-
11 Fkt1-
12 Fkt2-
13 GND SM
14 GND SM
15 GND SM
A31
48V DC
XC1
C1
C2
A 44 SM Endstufe
RTA CSD 94
Bereit -
Fehler (High = Fehler)
Puls -
Richtung -
Enable -
2 LEDs
RD
Fehler
GN
Versorgungs
Spannung
Dip Switch
1 OFF Strom 4,4A
2 OFF Strom 4,4A
3 ON Kurze Strecken und Dumping
4 OFF NA
5 OFF Halbschritt (400 Pls/Umdr.)
6 OFF Halbschritt (400 Pls/Umdr.)
Jumper
Up
Down
SCHRITTMOTOR
M4
SMZ
A
A\
B
B\
Schrittmotor Huepferfussantrieb
RTA (Sanyo Denki) 103H7123-1740

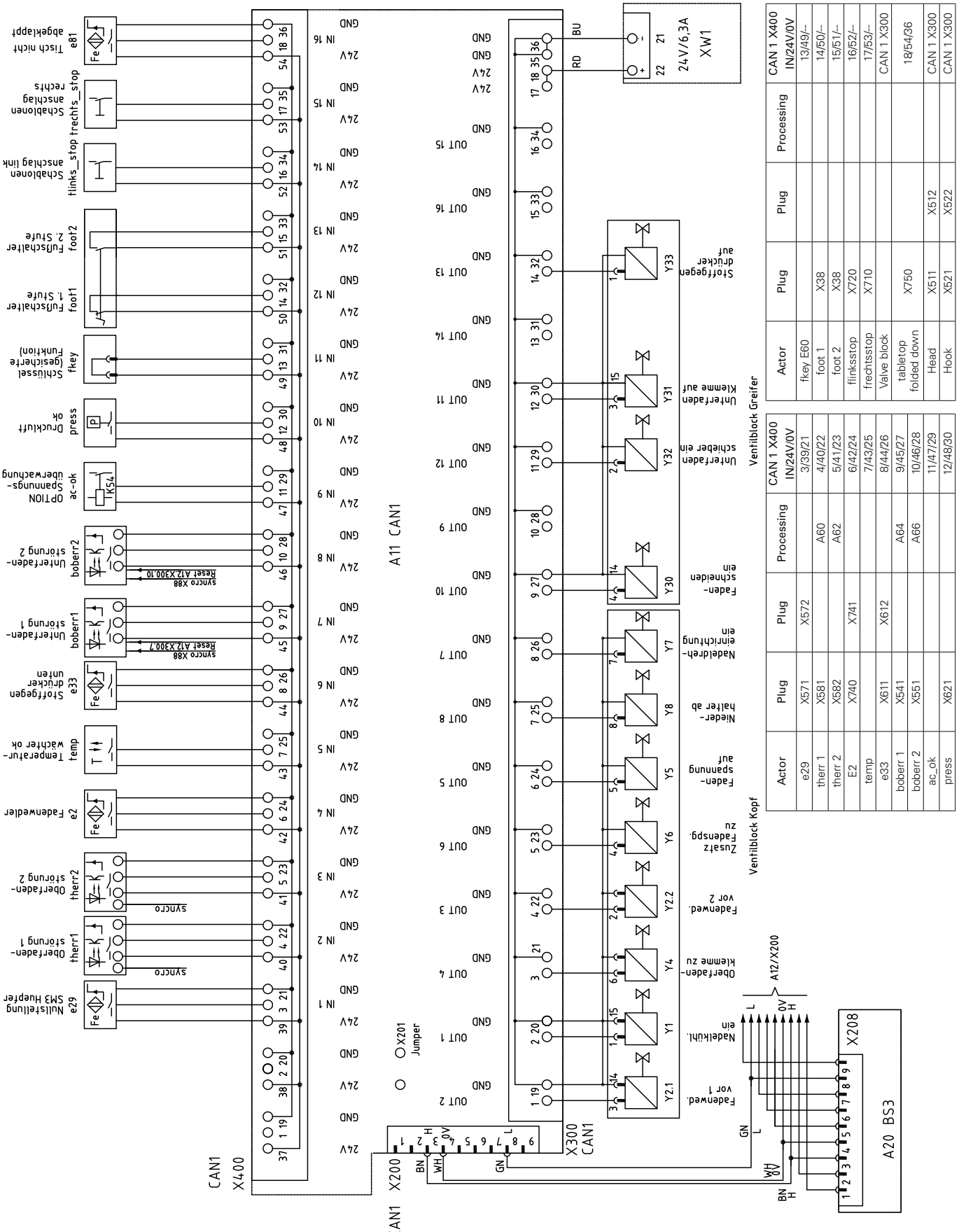

Actor	Plug	Processing	CAN 1 X400 IN/24V/0V
e29	X571	X572	3/39/21
therr 1	X581	A60	4/40/22
therr 2	X582	A62	5/41/23
E2	X740	X741	6/42/24
temp			7/43/25
e33	X611	X612	8/44/26
boberr 1	X541	A64	9/45/27
boberr 2	X551	A66	10/46/28
ac_ok			11/47/29
press	X621		12/48/30

Actor	Plug	Plug	Processing	CAN 1 X400 IN/24V/0V
fkey E60				13/49/--
foot 1	X38			14/50/--
foot 2	X38			15/51/--
flinksstop	X720			16/52/--
frechtsstop	X710			17/53/--
Valve block				CAN 1 X300
tabletop folded down	X750			18/54/36
Head	X611	X512		CAN 1 X300
Hook	X621	X522		CAN 1 X300

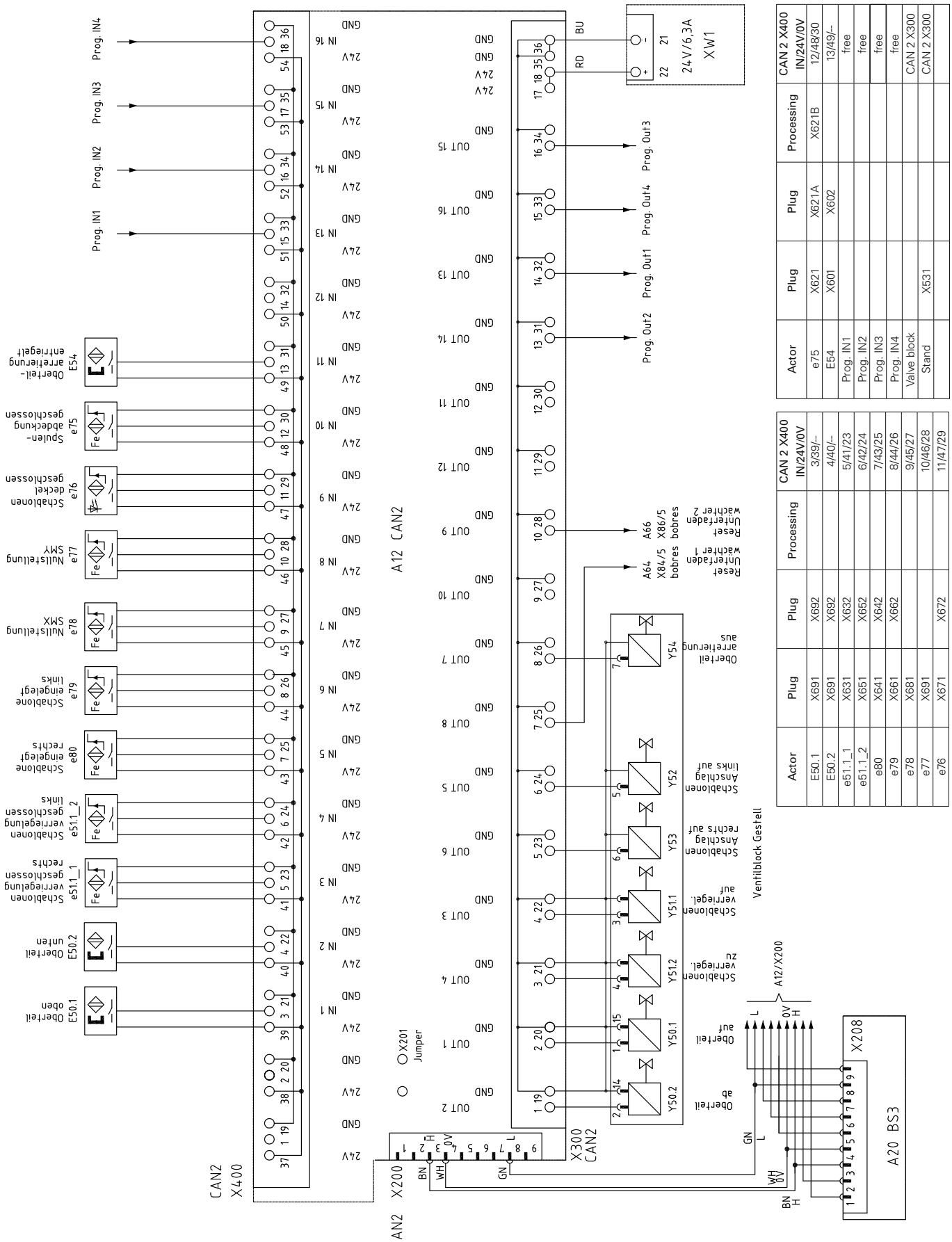

Actor	Plug	Processing	CAN 2 X400 IN/24V/0V
E50.1	X691	X692	3/39/--
E50.2	X691	X692	4/40/--
e51.1_1	X631	X632	5/41/23
e51.1_2	X651	X652	6/42/24
e80	X641	X642	7/43/25
e79	X661	X662	8/44/26
e78	X681		9/45/27
e77	X691		10/46/28
e76	X671	X672	11/47/29

Actor	Plug	Plug	Processing	CAN 2 X400 IN/24V/0V
e75	X621	X621A	X621B	12/48/30
E54	X601	X602		13/49/--
Prog. IN1				free
Prog. IN2				free
Prog. IN3				free
Prog. IN4				free
Valve block				CAN 2 X300
Stand	X531			CAN 2 X300

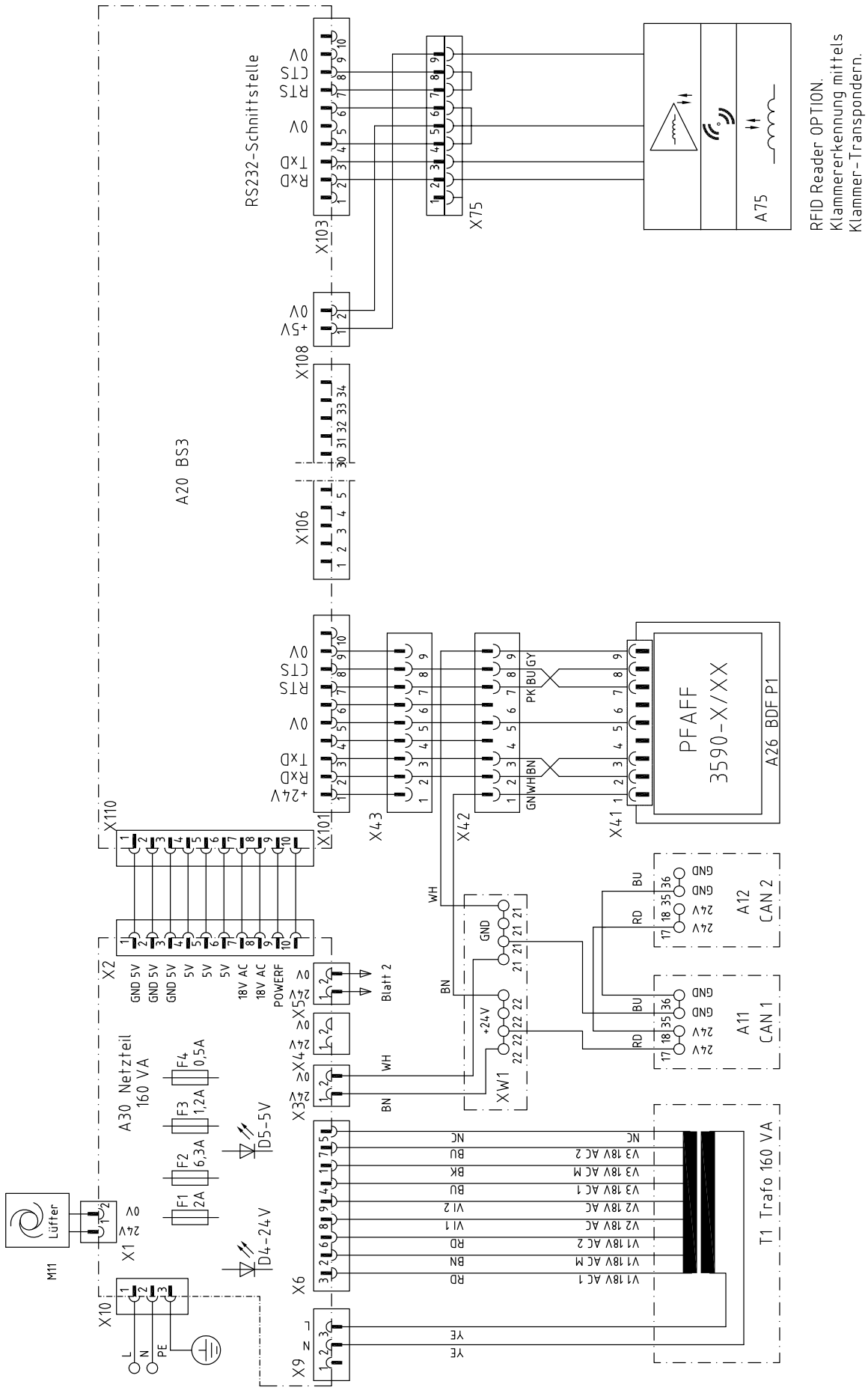
RS232-Schnittstelle
X103
X75
A75
RFID Reader OPTION.
Klammererkennung mittels
Klammer-Transpondern.
X108
X106
A20 BS3
X101
X43
X42
X41
PFAFF
3590-X/XX
A26 BDF P1
X110
X2
A12
CAN 2
A11
CAN 1
XW1
A30 Netzteil
160 VA
F1
2A
F2
6,3A
F3
1,2A
F4
0,5A
D5-5V
D4-24V
X1
M11
Lüfter
X10
X9
X6
X3
X4
X5
Blatt 2
T1 Trafo 160 VA

PFAFF® Industrial

Europäische Union
Wachstum durch Innovation – EFRE

PFAFF Industriesysteme
und Maschinen AG

Hans-Geiger-Str. 12 - IG Nord
D-67661 Kaiserslautern

Phone: +49-6301 3205 - 0
Fax: +49-6301 3205 1386
E-mail: info@pfaff-industrial.com

Printed in Germany

© PFAFF Industriesysteme und Maschinen AG 2009, PFAFF is the exclusive trademark of VSM Group AB.PFAFF Industriesysteme und Maschinen AG is an authorized licensee of the PFAFF trademark.